RC SERIES™ by Desert Aire

Remote Condensers

REMOTE CONDENSERS

Desert Aire's remote condensers are designed with a commitment to excellence that will provide you with years of reliable service.

All Desert Aire equipment is consistently manufactured to high performance standards for efficient, reliable service and they are easy to install.

HIGH PERFORMANCE, DURABILITY AND EFFICIENCY

COILS - Round tube coils with enhanced tubing, advanced sinusoidal fin design for optimal performance. Extensive use of 5/16" and 3/8" diameter tubing keeps refrigerant charge to a minimum.

Our optional coil coating provides a uniform, flexible coating over the entire coil with negligible impact on thermal conductivity. 100% coverage is assured by the application process, even in the hard to reach center portions of the coil, without bridging between the fins. We recommend the application anytime a remote condenser is located near a salt water coast or a potential source of corrosive airborne particles.

ELEVATION CORRECTION FACTORS

Elevation above sea level has an effect on the performance of air-cooled condensers. The unit capacities shown in the Performance Table must be multiplied by the correction factors in Table 1 to correct for various elevations.

ELEVATION (FEET)	1,000	2,000	3,000	4,000	5,000	6,000	7,000
CORRECTION FACTOR	0.98	0.96	0.93	0.91	0.89	0.87	0.85

Table 1

EASY INSTALLATION

After uncrating, the condenser legs pivot from their transport to installation position and the condenser easily lifts into place with the use of eye bolts or brackets located on top of the unit. At ground level, the condenser can rest on a solid surface such as a concrete slab. On roofs, the unit should be placed on channels or an I-beam frame.

Desert Aire has a remote condenser for every application. Our complete line of direct-drive condensers complements the wide range of our dehumidification offerings.

Est. 1978 DESERT AIRE

NOTES: All data contained in this document is subject to change without notice. Please consult factory for most current data. For longer refrigerant line lengths or greater elevation difference, please consult factory.

RCD SERIES™ by Desert Aire

The RCD range of condensers is sized up to 14.6 MBH/°F of heat rejection. The EC fans are controlled using PID to maintain a condenser pressure set point. Control panels are rated for 65 kA SCCR when power is supplied with class J fuses.

STANDARD FEATURES

- Powder coated galvannealed steel cabinet
- Folding legs, for compact shipping and easy installation
- Terminal block for power connection

OPTIONAL FEATURES

- Coated coil
- Vertical orientation with horizontal airflow
- Non-fused or fused disconnect

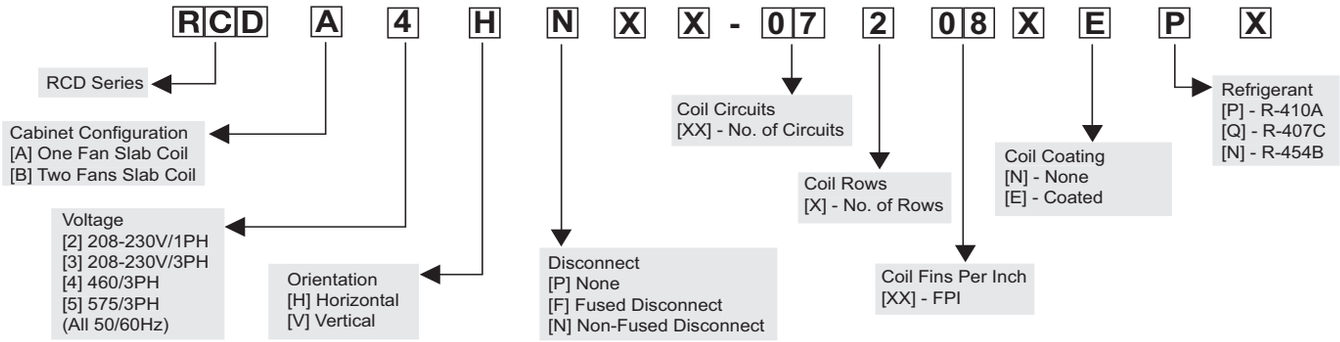

Figure 1 - RCD Model Matrix

DIMENSIONAL SPECIFICATIONS FOR RCD SERIES

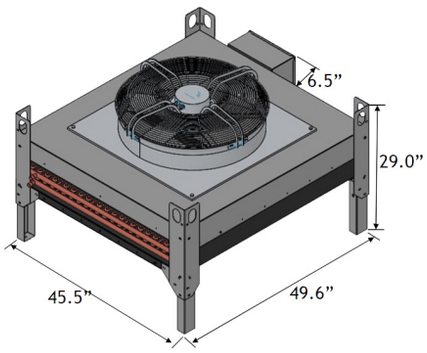

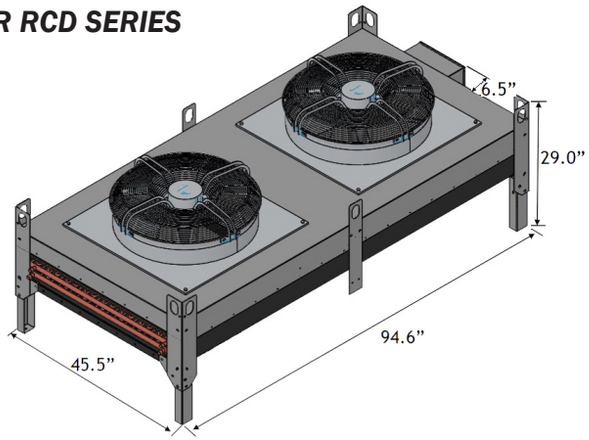

			RCDA** NN03108***	RCDA** NN07208***	RCDA** NN18414***	RCDB** NN30414***
DIMENSIONS	Connection[1] Size (in)	Discharge	7/8	7/8	7/8	7/8
		Liquid	7/8	7/8	7/8	7/8
	Fan Layout		1x1	1x1	1x1	1x2
	Mounting Holes (in)		42.9 x 46.1 (Φ3/8)	42.9 x 46.1 (Φ3/8)	42.9 x 46.1 (Φ3/8)	42.9 x 91.3 (Φ3/8)
	Approximate Weight (lbs)[2]		377	384	397	684
	dBA[3]		40-68	40-68	40-68	40-69

[1] Connection size does not indicate line size. Consult IO Manual.
[2] Add 49lbs for 575V applications.
[3] Listed dBA values are sound ratings for the maximum number of fans in operation per RC at 3m in accordance with AHRI standard 370-2001. Range indicates maximum and minimum sound intensities across each RC's application range.

ELECTRICAL SPECIFICATIONS AND PERFORMANCE TABLE FOR RCD SERIES

			RCDA**NN03108***	RCDA**NN07208***	RCDA**NN18414***	RCDB**NN30414***
ELECTRICAL	208-230V 1PH 60Hz	FLA	6.9	6.9	6.9	2 x 6.9
		MCA	8.6	8.6	8.6	15.5
		MOPD[1]	15.0	15.0	15.0	20.0
		Unit kW	0.75	0.75	0.75	1.5
	208-230V 3PH 60Hz	FLA	4.3	4.3	4.3	2 x 4.3
		MCA	5.4	5.4	5.4	9.7
		MOPD[1]	9.0	9.0	9.0	12.0
		Unit kW	1.1	1.1	1.1	2.2
	460V 3PH 60Hz	FLA	4.3	5.2	5.2	2 x 5.2
		MCA	5.4	6.5	6.5	11.7
		MOPD[1]	9.0	10.0	10.0	15.0
		Unit kW	1.1	3.2	3.2	6.4
	575V 3PH 60Hz	FLA	4.3	5.2	5.2	2 x 5.2
		MCA	7.5	7.5	7.5	11.3
		MOPD[1]	12.0	12.0	12.0	20.0
		Unit kW	1.1	3.2	3.2	6.4

[1] *MOPD - Maximum Overcurrent Protection Device.*

			RCDA**NN03108***	RCDA**NN07208***	RCDA**NN18414***	RCDB**NN30414***
NOMINAL PERFORMANCE (MBH/°F)	208-230V 1PH	R-410A	1.55	2.81	5.50	11.12
		R-407C	1.55	2.81	5.50	11.12
		R-454B	1.49	2.69	5.26	10.62
	208-230V 3PH	R-410A	1.64	2.94	5.80	11.73
		R-407C	1.64	2.94	5.80	11.73
		R-454B	1.57	2.81	5.55	11.20
	460 & 575V 3PH	R-410A	1.64	3.97	8.17	14.58
		R-407C	1.64	3.97	8.17	14.58
		R-454B	1.57	3.81	7.82	15.62

RC8 SERIES™

by Desert Aire

Desert Aire's RC8 range of condensers is sized up to 34.8 MBH/°F of heat rejection. Swept fan blades are designed as part of the direct drive motor. The RC8 series has fully enclosed motor lead raceways to protect wiring. Control panels are rated for 10kA SCCR when power is supplied with class J fuses.

STANDARD FEATURES

- Painted G90 cabinet
- All venturi fan panels for energy efficiency and low sound
- Door interrupt disconnect

OPTIONAL FEATURES

- E-coat on coil
- Vertical orientation with horizontal airflow

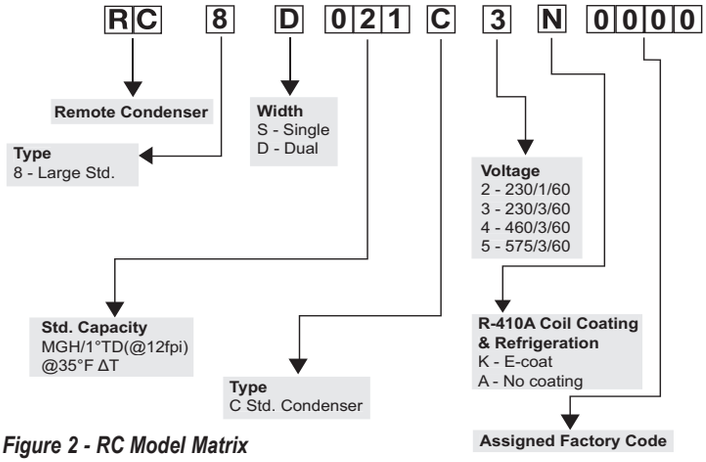

Figure 2 - RC Model Matrix

ELECTRICAL DATA

	Model	208-230/3/60			460/3/60			575/3/60			Unit kW
		FLA	MCA	MOPD[1]	FLA	MCA	MOPD[1]	FLA	MCA	MOPD[1]	
SINGLE WIDTH	RC8S007C	7.1	8.9	15	4.2	5.3	15	3.2	4	15	1.4
	RC8S009C	7.1	8.9	15	4.2	5.3	15	3.2	4	15	1.4
	RC8S011C	14.2	16	25	8.4	9.5	15	6.4	7.2	15	2.7
	RC8S015	14.2	16	25	8.4	9.5	15	6.4	7.2	15	2.8
	RC8S018C	14.2	16	25	8.4	9.5	15	6.4	7.2	15	2.9
	RC8S022C	21.3	23.1	30	12.6	13.7	20	9.6	10.4	15	4.2
	RC8S026C	21.3	23.1	30	12.6	13.7	20	9.6	10.4	15	4.4
	RC8S030C	28.4	30.2	40	16.8	17.9	25	12.8	13.6	20	5.6
	RC8S035C	28.4	30.2	40	16.8	17.9	25	12.8	13.6	20	5.8
DUAL WIDTH	RC8D022C	28.4	30.2	40	16.8	17.9	25	12.8	13.6	20	5.5
	RC8D029C	28.4	30.2	40	16.8	17.9	25	12.8	13.6	20	5.7
	RC8D035C	28.4	30.2	40	16.8	17.9	25	12.8	13.6	20	5.9
	RC8D044C	42.6	44.4	50	25.2	26.3	30	19.2	20	25	8.4
	RC8D052C	42.6	44.4	50	25.2	26.3	30	19.2	20	25	8.7
	RC8D060C	56.8	58.6	70	33.6	34.7	40	25.6	26.4	30	11.2
	RC8D070C	56.8	58.6	70	33.6	34.7	40	25.6	26.4	30	11.6

[1] *MOPD - Maximum Overcurrent Protection Device*

PERFORMANCE AND DIMENSIONAL DATA RC8 SERIES

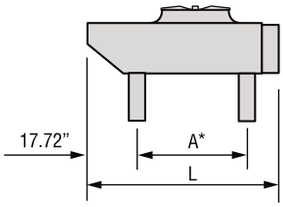

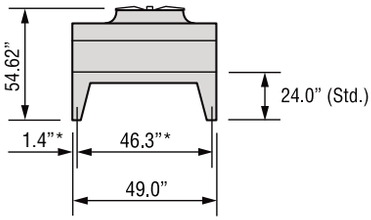

Single Wide End View

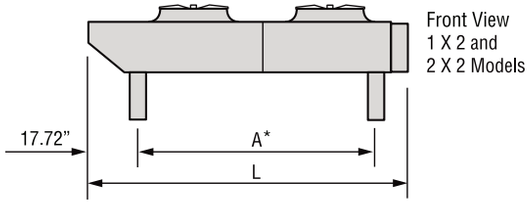

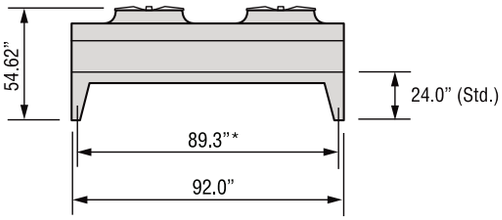

Double Wide End View

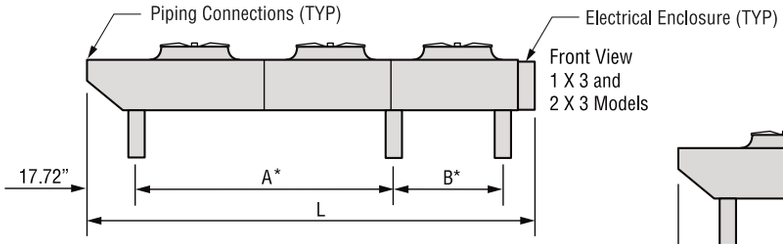

*Mounting fastener hole center

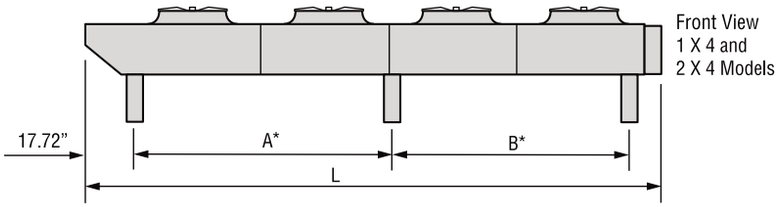

Model	Std. Capacity	Single Circ. RC. Conn (in)[1]		Dual Circ. RC. Conn (in)[1]		Fan Layout	Overall Length (L) (in)	Mounting Dimensions (in)		Approx. Net Wt. (lbs)	dBA[2]
	MBH/1°F	Disch. Line	Liq. Line	Disch. Line	Liq. Line			A	B		
RC8S007C	8.1	1-1/8	7/8	1-1/8	5/8	1 x 1	80.9	48.1	-	529	62.5
RC8S009C	9.3	1-1/8	7/8	1-1/8	3/4	1 x 1	80.9	48.1	-	551	62.5
RC8S011C	12.0	1-3/8	1-1/8	1-3/8	3/4	1 x 2	139.1	106.2	-	710	65.5
RC8S015C	15.6	1-3/8	1-1/8	1-3/8	7/8	1 x 2	139.1	106.2	-	829	65.5
RC8S018C	18.0	1-5/8	1-1/8	1-3/8	7/8	1 x 2	139.1	106.2	-	869	65.5
RC8S022C	24.7	1-5/8	1-3/8	1-5/8	1-1/8	1 x 3	197.1	111.1	53.1	1186	67.3
RC8S026C	28.2	1-5/8	1-3/8	1-5/8	1-1/8	1 x 3	197.1	111.1	53.1	1246	67.3
RC8S030C	33.5	1-5/8	1-3/8	1-5/8	1-1/8	1 x 4	255.1	111.1	111.1	1497	68.5
RC8S035C	37.7	1-5/8	1-3/8	1-5/8	1-1/8	1 x 4	255.1	111.1	111.1	1574	68.5
RC8D022C	23.2	1-5/8	1-3/8	1-5/8	1-1/8	2 x 2	139.1	106.2	-	1301	68.5
RC8D029C	30.2	1-5/8	1-3/8	1-5/8	1-1/8	2 x 2	139.1	106.2	-	1537	68.5
RC8D035C	34.8	1-5/8	1-3/8	1-5/8	1-1/8	2 x 2	139.1	106.2	-	1614	68.5
RC8D044C	47.81	1-5/8	1-5/8	1-5/8	1-3/8	2 x 3	197.1	111.1	53.1	2086	70.3
RC8D052C	54.12	1-5/8	1-5/8	1-5/8	1-3/8	2 x 3	197.1	111.1	53.1	2196	70.3
RC8D060C	65.44	-	-	1-5/8	1-3/8	2 x 4	255.1	111.1	111.1	2845	71.5
RC8D070C	73.51	-	-	1-5/8	1-3/8	2 x 4	255.1	111.1	111.1	2999	71.5

1 Line sizes are based on 50ft. line set / max. 10ft. elevation difference at 35°F ΔT. Line connections may vary with different application ratings. Consult IO Manual.
2 Listed DBA values are sound ratings for the maximum number of fans in operation per RC at 3m in accordance with AHRI standard 370-2001.

Location of Remote Condenser System

The equipment is designed for outdoor installation and may be mounted on a roof or concrete slab. The units should be mounted level on roofs, slabs and/or structural supports that are sufficiently strong to support the total equipment operating weight. Consult a professional engineer to determine safe mounting loads.

Sufficient space for uninhibited airflow should be provided when near: overhangs; walls; pits; fences; other equipment; and building air intakes, vents or exhaust fans. Locate the remote condenser far enough away from obstructions to provide adequate clearance for ambient air inlet and discharge to prevent 1) reducing the airflow through the condenser coil; and 2) causing air recirculation which heats the air entering the coil above ambient. See Figure 3 for recommendations. Do not attach ductwork to the coil inlet or outlet. Be sure to allow ample space for maintenance work.

Locate equipment away from occupied spaces to reduce the transmission of objectionable sound and/or vibration. Use refrigerant piping flexible to prevent transmission of noise and vibration into the building. Use isolation hangers to support refrigerant lines. The unit must be secured in its final location. Holes are provided in the mounting legs for this purpose.

A

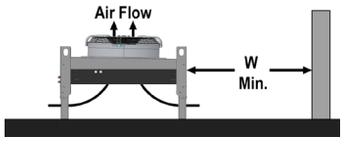

Walls or Obstructions: All sides of the unit should be a minimum of one overall unit width “W” away from any wall or barrier.

B

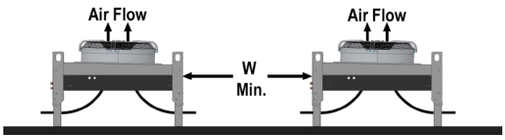

Multiple Units: For units placed side by side, the minimum distance between the units is the overall width “W” of largest unit.

C

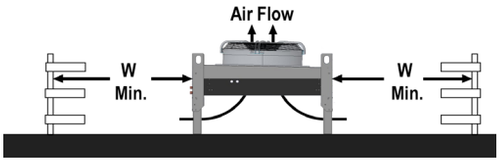

Decorative Fences: Fences must have 50% free area, with 1 foot of bottom clearance, and must not extend higher than the top of the unit. Units should be a minimum of one overall width “W” away from fence.

D

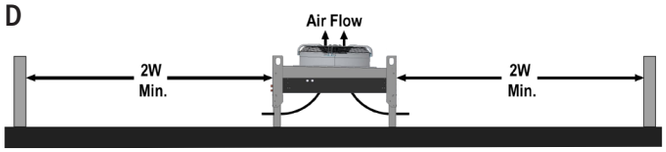

Units in Pits: The top of the unit must be level with, or higher than, the top of the pit. All sides of the unit should be a minimum of two overall unit widths “2W” away from any wall of the pit.

E

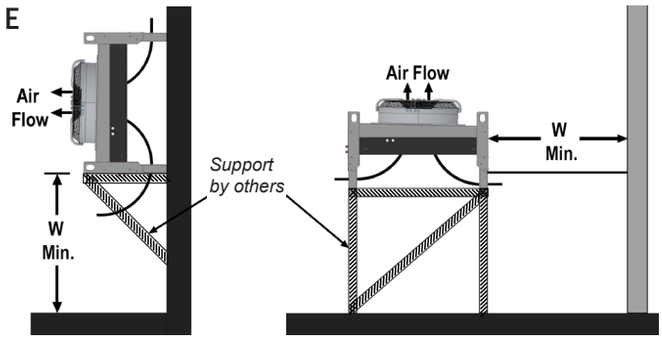

Horizontal Airflow Mount or Raised Platform Mount: The unit sides should be a minimum of one overall unit width “W” away from ground (Horizontal Airflow Mount) or wall (Raised Platform Mount). The support is provided by others and must allow airflow to access the coil.

Figure 3 - Space and Location Requirements

Optimizing Solutions Through Superior Dehumidification Technology

N120 W18485 Friestadt Road, Germantown, WI 53022 sales@desert-aire.com

Ph: (262) 946-7400 - www.desert-aire.com

Est. 1978 DESERT AIRE

WARNING: Cancer and Reproductive Harm - www.P65Warnings.ca.gov

226 2025/06