G805-010

CONDENSER ACCESS VIEW 2 6 7

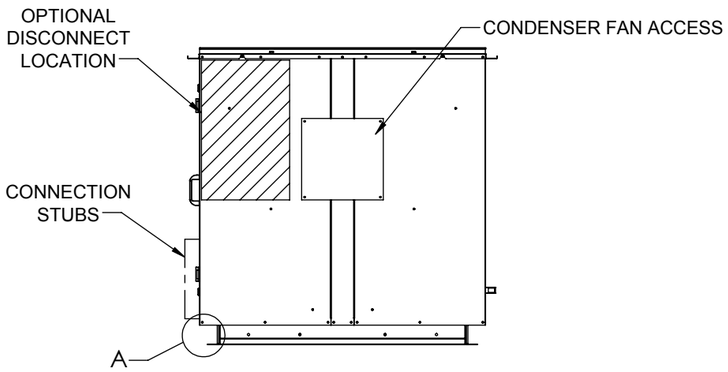

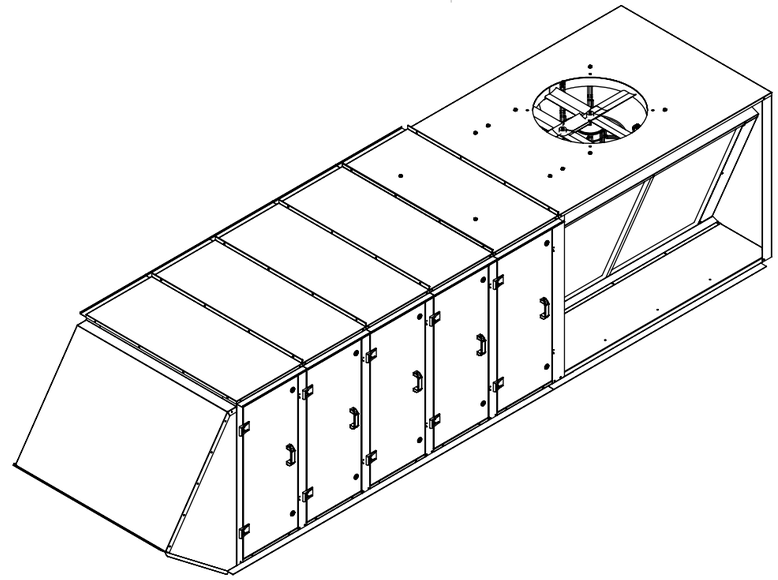

AIR FLOW	UNIT CABINET SIZES	UNIT SIZE (TONS)	L1	W1	H1	L2	W2
DOWN FLOW	24	02	146 1/8	37 1/8	46 3/8	168 1/8	43 1/8
		03	146 1/8	37 1/8	46 3/8	168 1/8	43 1/8
		05	160 1/2	37 1/8	46 3/8	182 5/8	43 1/8
	36	08	195 5/8	49 1/8	51 1/8	220 1/8	55 1/8
		10	195 5/8	49 1/8	51 1/8	220 1/8	55 1/8
		15	195 5/8	49 1/8	51 1/8	220 1/8	55 1/8
	44	20	221 1/4	54 1/2	55 1/8	247 3/4	60 1/2
	50	25	238 1/8	61 1/8	63 1/8	268 3/4	67 1/8
		30	271 7/8	61 1/8	63 1/8	302 3/8	67 1/8
TOP FLOW	24	02	146 1/8	37 1/8	46 3/8	168 1/8	43 1/8
		03	146 1/8	37 1/8	46 3/8	168 1/8	43 1/8
		05	160 1/2	37 1/8	46 3/8	182 5/8	43 1/8
	36	08	195 5/8	49 1/8	51 1/8	220 1/8	55 1/8
		10	195 5/8	49 1/8	51 1/8	220 1/8	55 1/8
		15	195 5/8	49 1/8	51 1/8	220 1/8	55 1/8
	44	20	221 1/4	54 1/2	55 1/8	247 3/4	60 1/2
	50	25	238 1/8	61 1/8	63 1/8	268 3/4	67 1/8
		30	271 7/8	61 1/8	63 1/8	302 3/8	67 1/8

O/A INTAKE VIEW 2 6 7

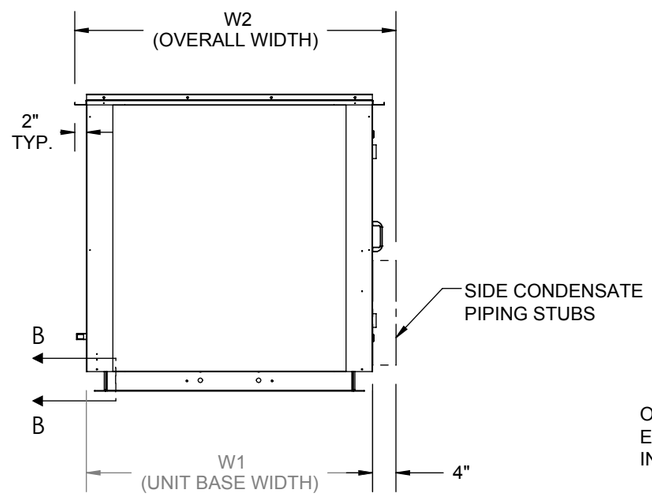

ACCESS SIDE VIEW 2 6 7

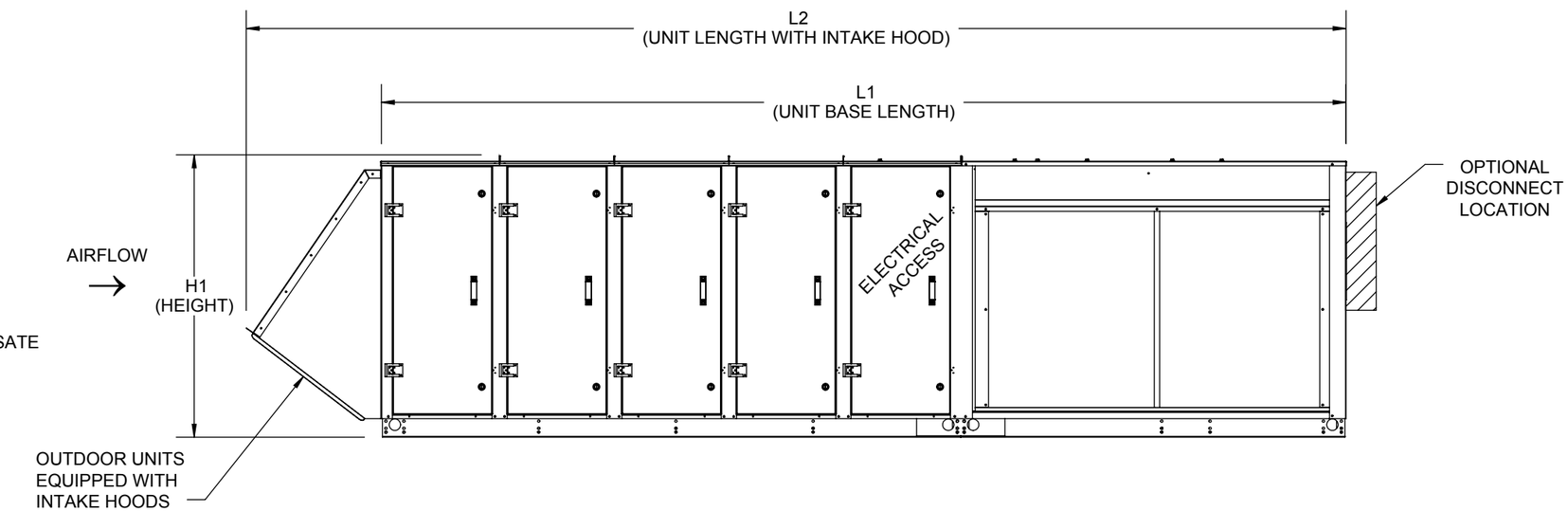

GENERAL NOTES AS REFERENCED BY INDIVIDUAL SHEETS:

1. PORTION OF SECTIONED OR DETAILED DRAWING HAS BEEN OMITTED FOR CLARITY.
2. HOODS OMITTED FOR CLARITY.
3. VIEW IS FOR PICTORAL PURPOSES. REFER TO PAGE 1 FOR UNIT TYPE SPECIFIC VIEW.
4. REFER TO SUBMITTAL FOR CUSTOMER CONNECTION LOCATIONS.
5. DIMENSIONS ARE TO ACCESS SIDE OF UNIT.
6. RH ACCESS SHOWN FOR DISPLAY PURPOSES. ACCESS DOOR CONFIGURATION MAY CHANGE DEPENDING ON UNIT SIZE.
7. REFER TO SHEET 3,4,5 FOR INTAKE AND DISCHARGE CONNECTION DIMENSIONS.

Desert Aire has a policy of continuous product and quality improvement. Specifications and dimensions are subject to change without notice. This drawing and information contained herein are the exclusive property of the Desert Aire Corporation. Any use detrimental to the interests of Desert Aire is prohibited.

ALL DIMENSIONS ARE IN INCHES
FRACTIONAL TOLERANCE ± 1/8"

All Dimensions in Inches
All Angles 90°
All outside corners 0.125" fillet
Unless Otherwise Specified

Third Angle Projection

Part weight

Tolerance Unless Otherwise Specifed

X.X	±.125
X.XX	±.060
X.XXX	±.030
Angles	±1°

DESERT AIRE
N120 W18485 FREISTADT RD
GERMANTOWN, WI 53022
Tel: (262) 946-7400
Fax: (262) 946-7401

Drawn	Date Released	Description
BCL	5/11/2011	EXTENDED PACKAGED
Sheet 1/5		Page Title GENERAL ARRANGEMENT
Scale NTS	Rev. 3	Drawing Number G805-010

G805-010

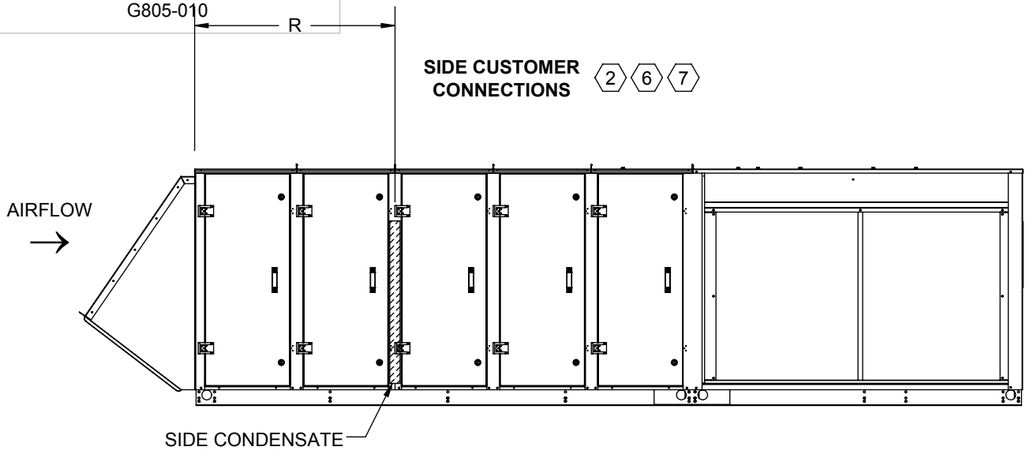

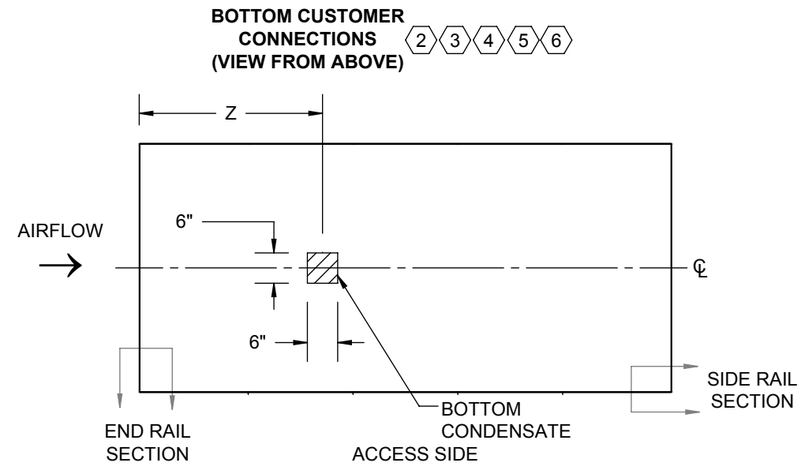

NOTES:
REFER TO SHEET 1 FOR GENERAL NOTES.

AIR FLOW	UNIT CABINET SIZES	UNIT SIZE (TONS)	R	Z
DOWN FLOW	24	02	53 1/4	30 1/4
		03	53 1/4	30 1/4
		05	53 1/4	30 1/4
	36	08	42 3/8	42 3/8
		10	42 3/8	42 3/8
		15	42 3/8	42 3/8
	44	20	45	44 7/8
	50	25	45 3/4	45 3/4
		30	45 3/4	45 3/4
TOP FLOW	24	02	53 1/4	30 1/4
		03	53 1/4	30 1/4
		05	53 1/4	30 1/4
	36	08	42 3/8	42 3/8
		10	42 3/8	42 3/8
		15	42 3/8	42 3/8
	44	20	45	44 7/8
	50	25	45 3/4	45 3/4
		30	45 3/4	45 3/4

02 THRU 30 TON UNITS

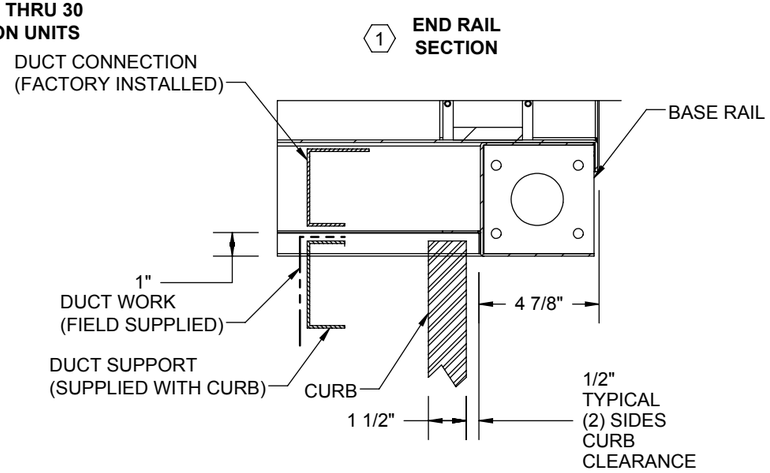

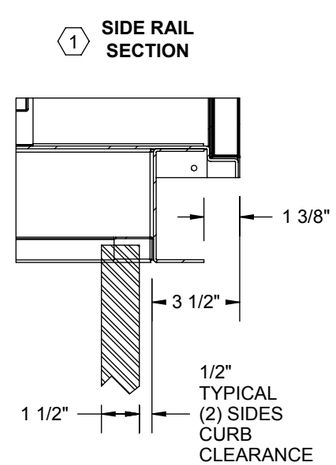

CUSTOMER CONNECTION LINE SIZE SUMMARY (in.)									
Unit Size	2 TONS	3 TONS	5 TONS	8 TONS	10 TONS	15 TONS	20 TONS	25 TONS	30 TONS
CONDENSATE	1	1	1	1	1	1	1	1	1

Desert Aire has a policy of continuous product and quality improvement. Specifications and dimensions are subject to change without notice. This drawing and information contained herein are the exclusive property of the Desert Aire Corporation. Any use detrimental to the interests of Desert Aire is prohibited.

ALL DIMENSIONS ARE IN INCHES
FRACTIONAL TOLERANCE ± 1/8"

All Dimensions in Inches
All Angles 90°
All outside corners 0.125" fillet
Unless Otherwise Specified

Third Angle Projection

Part weight

Tolerance Unless Otherwise Specifed
X.X ±.125
X.XX ±.060
X.XXX ±.030
Angles ±1°

DESERT AIRE
N120 W18485 FREISTADT RD
GERMANTOWN, WI 53022
Tel: (262) 946-7400
Fax: (262) 946-7401

Drawn	Date Released	Description
BCL	5/11/2011	EXTENDED PACKAGED
Sheet 2/5		Page Title CUSTOMER INTERFACE GA
Scale NTS	Rev. 3	Drawing Number G805-010

G805-010

O/A INTAKE VIEW 3 5 6

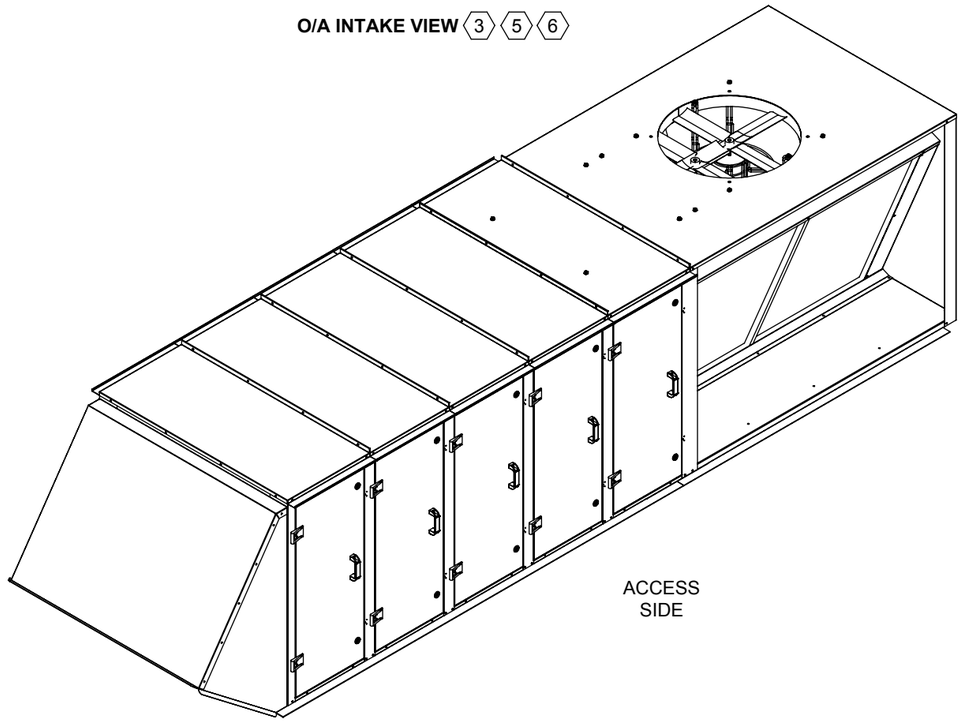

DISCHARGE VIEW 3 5 6

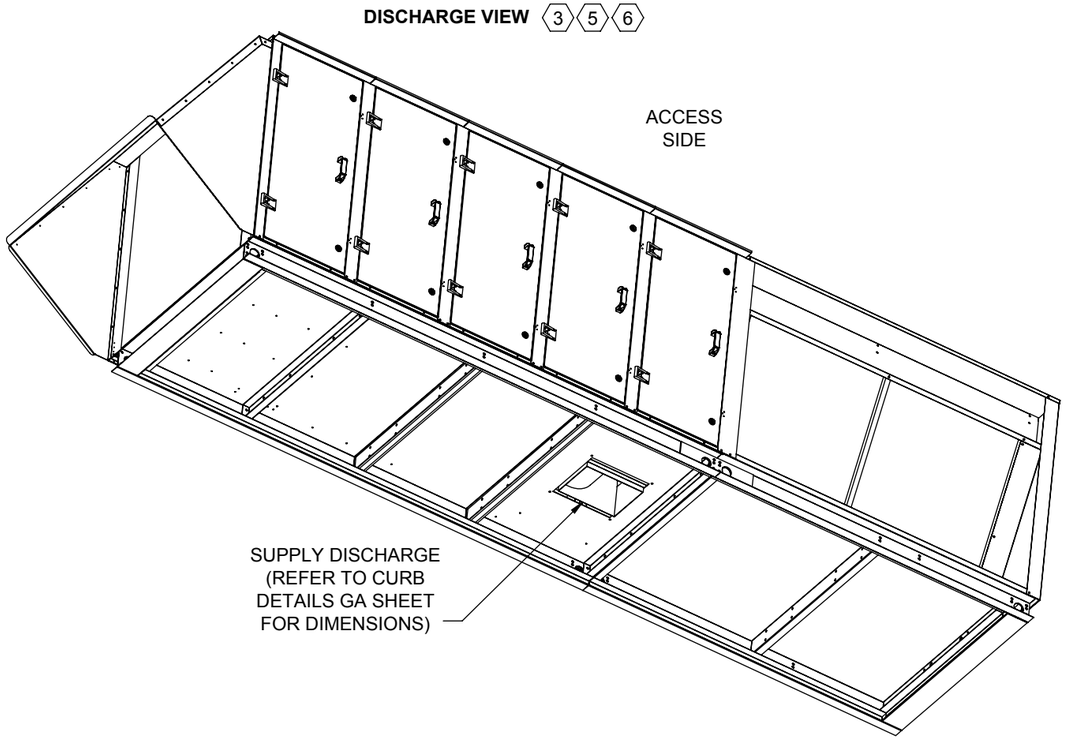

NOTES:

REFER TO SHEET 1 FOR GENERAL NOTES.

WEIGHTS SHOWN REFLECT FULLY OPTIONED ESTIMATED UNIT WEIGHT.

REFER TO CURB DETAILS GA SHEET FOR SUPPLY DUCT DIMENSION AND LOCATIONS.

UNIT CABINET SIZES	UNIT SIZE (TONS)	DOWN DISCHARGE TOTAL EST. WEIGHT (LBS.)
24	02	1445
	03	1494
	05	1736
36	08	2450
	10	2651
	15	3077
44	20	3600
50	25	4291
	30	4835

Desert Aire has a policy of continuous product and quality improvement. Specifications and dimensions are subject to change without notice. This drawing and information contained herein are the exclusive property of the Desert Aire Corporation. Any use detrimental to the interests of Desert Aire is prohibited.

ALL DIMENSIONS ARE IN INCHES
FRACTIONAL TOLERANCE ± 1/8"

All Dimensions in Inches
All Angles 90°
All outside corners 0.125" fillet
Unless Otherwise Specified

Third Angle Projection

Part weight

Tolerance Unless Otherwise Specifed
X.X ±.125
X.XX ±.060
X.XXX ±.030
Angles ±1°

DESERT AIRE
N120 W18485 FREISTADT RD
GERMANTOWN, WI 53022
Tel: (262) 946-7400
Fax: (262) 946-7401

Drawn	Date Released	Description
BCL	5/11/2011	EXTENDED PACKAGED
Sheet 3/5		Page Title DOWN DISCHARGE GA
Scale NTS	Rev. 3	Drawing Number G805-010

G805-010

NOTES:
REFER TO SHEET 1 FOR GENERAL NOTES.
WEIGHTS SHOWN REFLECT FULLY OPTIONED ESTIMATED UNIT WEIGHT.

UNIT CABINET SIZES	UNIT SIZE (TONS)	TOP DISCHARGE				
		SUPPLY DISCHARGE (in.)				TOTAL EST. WEIGHT (LBS.)
		A1	B1	C1 (5)	D1	
24	02	40 3/4	12 3/4	13 5/8	9 7/8	1445
	03	40 3/4	12 3/4	13 5/8	9 7/8	1494
	05	55 1/8	11 1/2	13 5/8	9 7/8	1736
36	08	70 3/4	16	16 5/8	15 3/4	2450
	10	70 3/4	16	16 5/8	15 3/4	2651
	15	70 3/4	16	16 5/8	15 3/4	3077
44	20	88 5/8	28 3/8	17 7/8	18 3/4	3600
50	25	102 1/8	28 3/8	19 1/2	22 1/8	4291
	30	135 7/8	28 3/8	19 1/2	22 1/8	4835

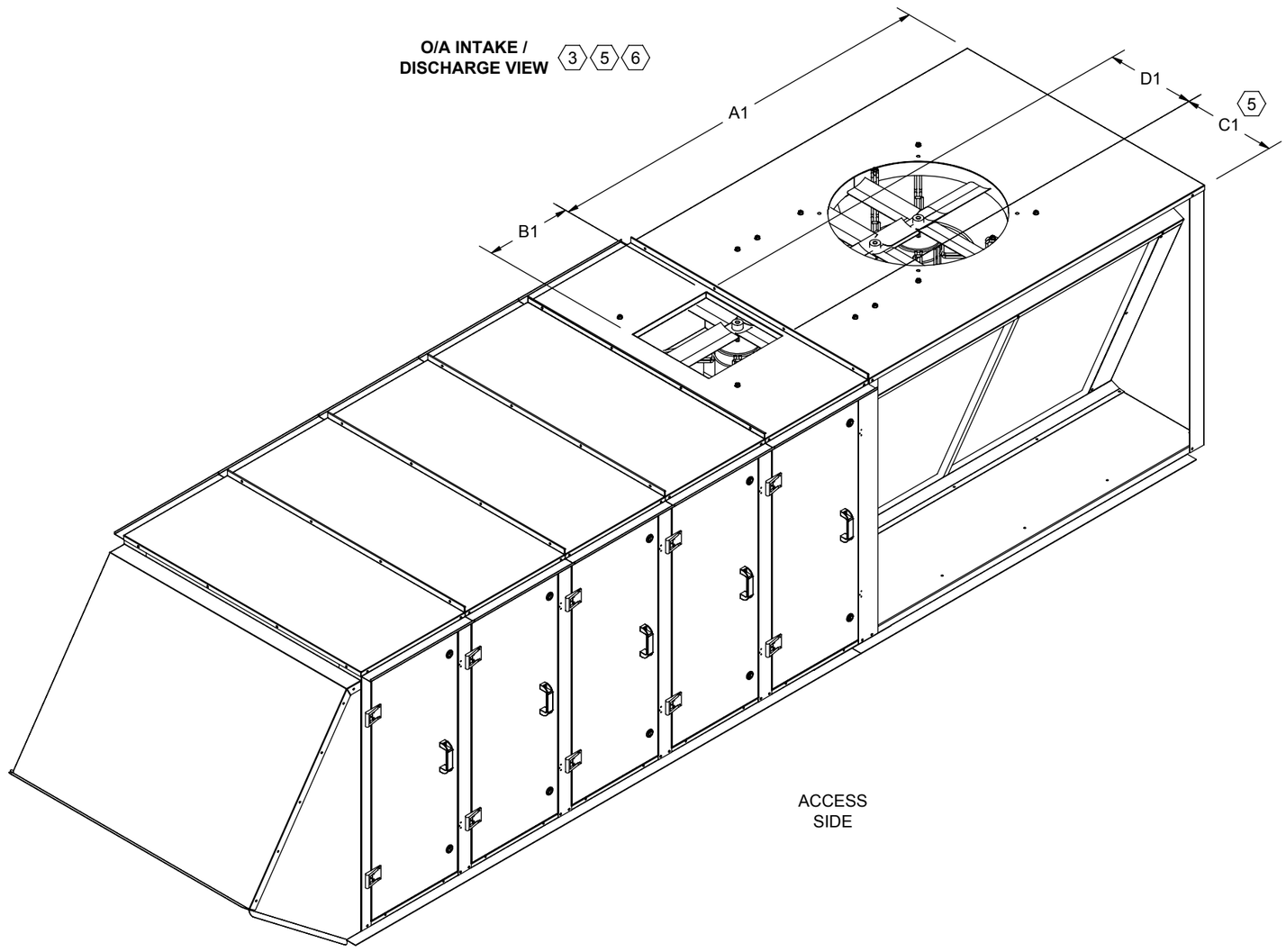

Desert Aire has a policy of continuous product and quality improvement. Specifications and dimensions are subject to change without notice. This drawing and information contained herein are the exclusive property of the Desert Aire Corporation. Any use detrimental to the interests of Desert Aire is prohibited.

ALL DIMENSIONS ARE IN INCHES
FRACTIONAL TOLERANCE ± 1/8"

All Dimensions in Inches
All Angles 90°
All outside corners 0.125" fillet
Unless Otherwise Specified

Third Angle Projection

Part weight

Tolerance Unless Otherwise Specifed
X.X ±.125
X.XX ±.060
X.XXX ±.030
Angles ±1°

DESERT AIRE
N120 W18485 FREISTADT RD
GERMANTOWN, WI 53022
Tel: (262) 946-7400
Fax: (262) 946-7401

Drawn	Date Released	Description
BCL	5/11/2011	EXTENDED PACKAGED
Sheet 4/5		Page Title TOP DISCHARGE GA
Scale NTS	Rev. 3	Drawing Number G805-010

G805-010

NOTES:

REFER TO SHEET 1 FOR GENERAL NOTES.

CURBS 120" AND LESS ARE SHIPPED AS COMPLETE CURBS. GREATER THAN 120" ARE SHIPPED KNOCKED DOWN.

NUMBER AND LOCATION OF CROSS SUPPORT(S) IS DEPENDANT UPON THE GUAGE OF MATERIAL USED TO CONTRUCT THE CURB, DUCT SUPPORT CONFIGURATION, LENGTH OF CURB AND WIDTH OF CURB. INSTALLATION INSTRUCTIONS INCLUDED WITH CURB SHIPMENT INDICATE THE REQUIRED POSITION FOR FIELD ASSEMBLED CURBS.

UNIT CABINET SIZES	UNIT SIZE (TONS)	TOP FLOW ROOFCURB DIMS			DOWN FLOW ROOFCURB DIMS						
		CURB P/N	WIDTH (in.)	LENGTH (in.)	CURB P/N	WIDTH (in.)	LENGTH (in.)	SUPPLY DISCHARGE (in.)			
								A	B	C (5)	D
24	02	CB02NPBN04-XX	29 1/8	135 1/4	CB02NPCN04-XX	29 1/8	135 1/4	35 1/2	11 1/2	8 1/8	9 7/8
	03	CB03NPBN04-XX	29 1/8	135 1/4	CB03NPCN04-XX	29 1/8	135 1/4	35 1/2	11 1/2	8 1/8	9 7/8
	05	CB05NPBN04-XX	29 1/8	149 5/8	CB05NPCN04-XX	29 1/8	149 5/8	49 7/8	11 1/2	8 1/8	9 7/8
36	08	CB08NPBN06-XX	41 1/8	184 7/8	CB08NPCN06-XX	41 1/8	184 7/8	69 1/2	13 3/4	11 1/8	15 3/4
	10	CB10NPBN06-XX	41 1/8	184 7/8	CB10NPCN06-XX	41 1/8	184 7/8	69 1/2	13 3/4	11 1/8	15 3/4
	15	CB15NPBN06-XX	41 1/8	184 7/8	CB15NPCN06-XX	41 1/8	184 7/8	69 1/2	13 3/4	11 1/8	15 3/4
44	20	CB20NPBN06-XX	46 1/2	210 1/2	CB20NPCN06-XX	46 1/2	210 1/2	87 3/8	16	12 3/8	18 3/4
50	25	CB25NPBN06-XX	53 1/8	227 3/8	CB25NPCN06-XX	53 1/8	227 3/8	101	19	14	22 1/8
	30	CB30NPBN06-XX	53 1/8	261 1/8	CB30NPCN06-XX	53 1/8	261 1/8	134 5/8	19	14	22 1/8

SECTION L-L

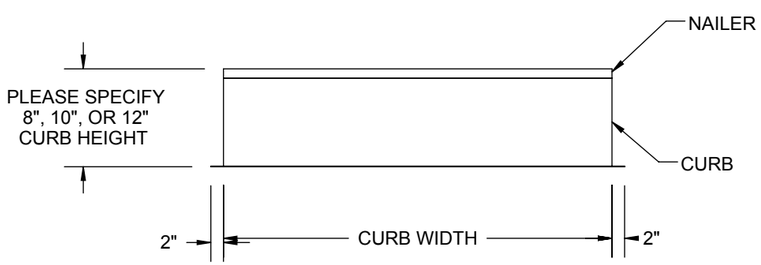

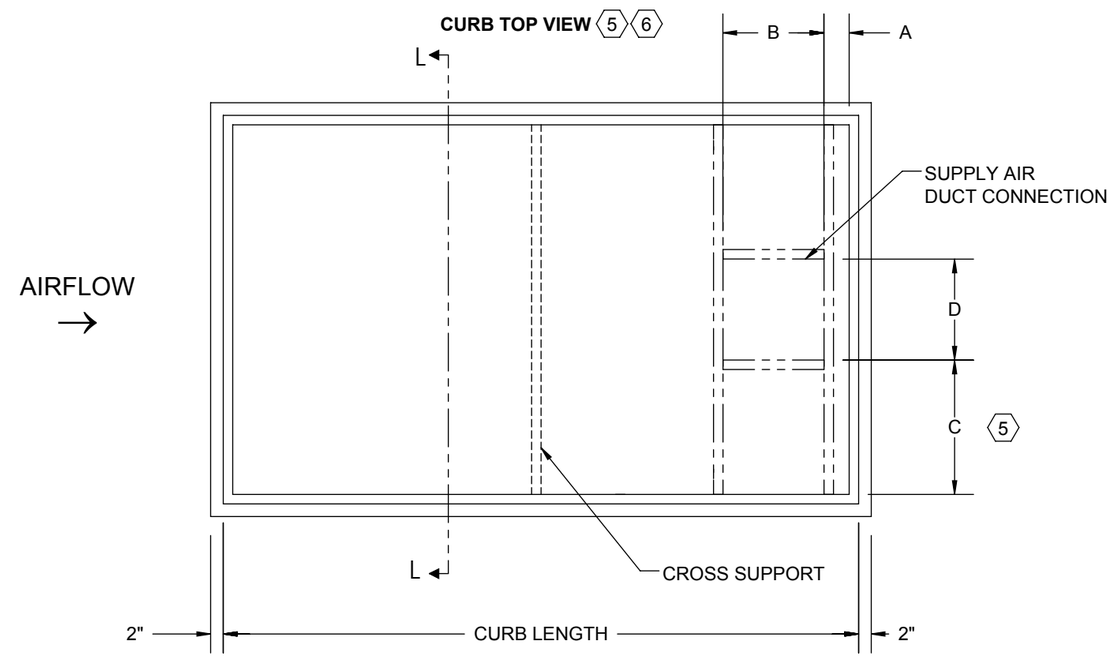

— - - —— - - — DUCT CONNECTIONS FOR DOWN DISCHARGE

Desert Aire has a policy of continuous product and quality improvement. Specifications and dimensions are subject to change without notice. This drawing and information contained herein are the exclusive property of the Desert Aire Corporation. Any use detrimental to the interests of Desert Aire is prohibited.

ALL DIMENSIONS ARE IN INCHES
FRACTIONAL TOLERANCE ± 1/8"

All Dimensions in Inches
All Angles 90°
All outside corners 0.125" fillet
Unless Otherwise Specified

Third Angle Projection

Part weight

Tolerance Unless Otherwise Specifed

X.X	±.125
X.XX	±.060
X.XXX	±.030
Angles	±1°

DESERT AIRE
N120 W18485 FREISTADT RD
GERMANTOWN, WI 53022
Tel: (262) 946-7400
Fax: (262) 946-7401

Drawn	Date Released	Description
BCL	5/11/2011	EXTENDED PACKAGED
Sheet		Page Title
5/5		CURB DETAILS GA
Scale	Rev.	Drawing Number
NTS	3	G805-010