HPR™ by Desert Aire

Portable Dehumidifiers

Dehumidifiers for Confined Area Applications

Carpet Cleaning

Water/Wastewater Industry

Book and Archival

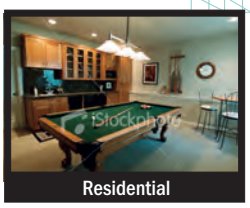
Residential

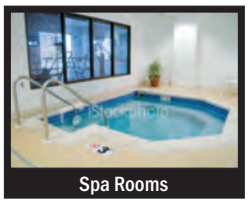
Spa Rooms

Desert Aire's HPR 120 Dehumidifier offers complete humidity control solutions for "small area" applications. This quiet, dependable,compact and portable unit delivers unsurpassed moisture removal for it's size. The HPR 120 is manufactured with the same quality, preferred components and attention to detail as our large commercial units for guaranteed superior performance. Serves diverse applications such as:

- Service Industries - rent-a-centers, fire/flood/hurricane restoration, tent rentals, carpet cleaning (post shampoo drying)
- Water and Wastewater Industry - easily fits through manholes
- Storage Areas - book and archival, hotel linen, condo/apartment, print shops, manufacturing, antique storage
- Residential - reduces mold and mildew growth, protects valuable family assets, great for spa rooms

Dehumidify with the Experts ... Desert Aire

Product Information

Compact Performers

Our HPR units are small enough to fit just about anywhere. Yet, despite their size, they're real workhorses and are capable of removing 2.5 to 12 lbs. of moisture per hour (57.5 to 276 pints of moisture per day).

Just like our larger dehumidifiers, our HPR units use an evaporator coil to remove moisture and a reheat coil to warm supply air and prevent over-cooling of the space. Therefore, when operating, the unit will always automatically deliver warm supply air to the space.

HPR Series Standard Features

Construction

- R-410A refrigerant
- Galvanneal metal cabinet with non-corrosive powder coat finish
- industrial grade centrifugal blower provides maximum air circulation
- integral power cord (standard 10' cord and plug on all units)
- copper tubes with aluminum fins (see optional coating at right)

Controls

- units can be activated manually or automatically by humidistat

HPR Series Options (See pg. 3 for diagrams and photos)

- oversize wheels available for easy portability, even on stairs
- brackets offered for mounting unit to wall
- feet available to replace wheels and keep unit stationary
- optional condensate pump provides drainage up to 20 feet away
- low temperature demand defrost system allows operation down to 32°F

MODEL	HPR 120 Standard	HPR 120 Low Temp
MRC lbs./hr.*	6.8*	3.4†
Supply Air Volume - CFM	400	
Dimensions	See Diagrams Pg. 3	
Weight	150 pounds (approx.)	
W/Condensate Pump		
FLA - (115V, 1) / NEMA Receptacle	15.5 / 5-20R	
FLA - (208-230V, 1) / NEMA Receptacle	8.5 / 6-15R	
Power Consumption - kW (115V, 1)	1.97	
Power Consumption - kW (208-230V, 1)	1.84	
W/O Condensate Pump		
FLA - (115V, 1) / NEMA Receptacle	13.8 / 5-20R	
FLA - (208-230V, 1) / NEMA Receptacle	7.6 / 6-15R	
Power Consumption - kW (115V, 1)	1.79	
Power Consumption - kW (208-230V, 1)	1.65	

NOTES:
1) Performance values utilize reheat mode.
2) Electrical ratings and blower HP values based on Standard 0.1" ESP.
3) *Denotes 80° F/60% RH at sea level.
4) † Denotes 50° F/80% RH at sea level.

Specifications are subject to slight changes without notice.

Optional ElectroFin® Coating

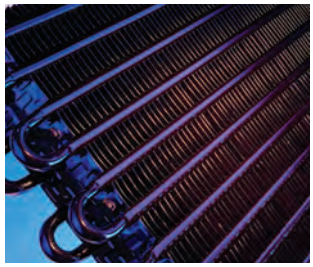

Protect your investment from harsh environments with an optional ElectroFin® coating

Warranty

The unit shall be manufactured of the finest quality components which are readily available as off-the-shelf replacement parts throughout North America. All components shall be warranted for a period of two (2) years from date of unit shipment.

Performance

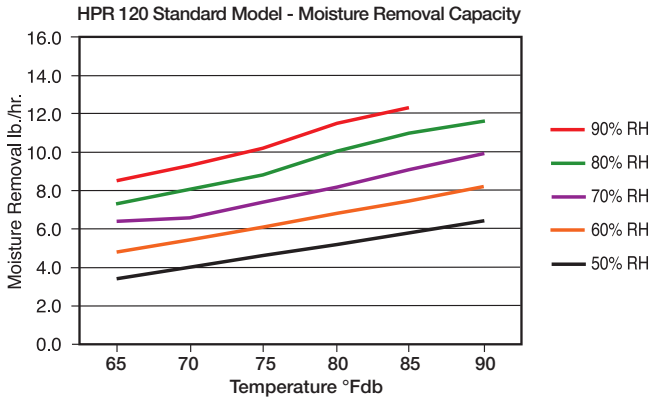

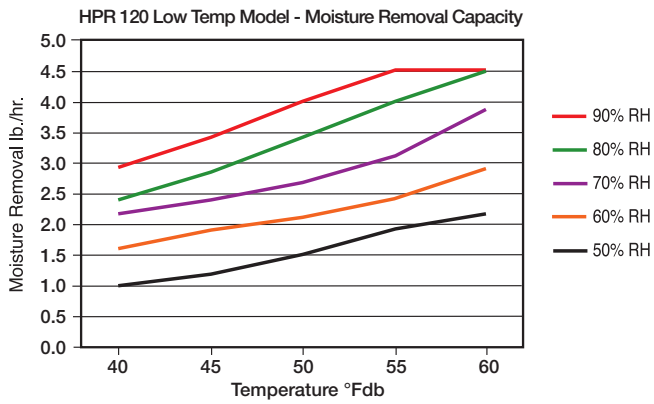

NOTES:
1) Values calculated for sea level.
2) Do not extrapolate beyond operating range shown in graph.

HPR Weight (all configurations) 150 POUNDS (APPROX.)

HPR Portable Dimensions

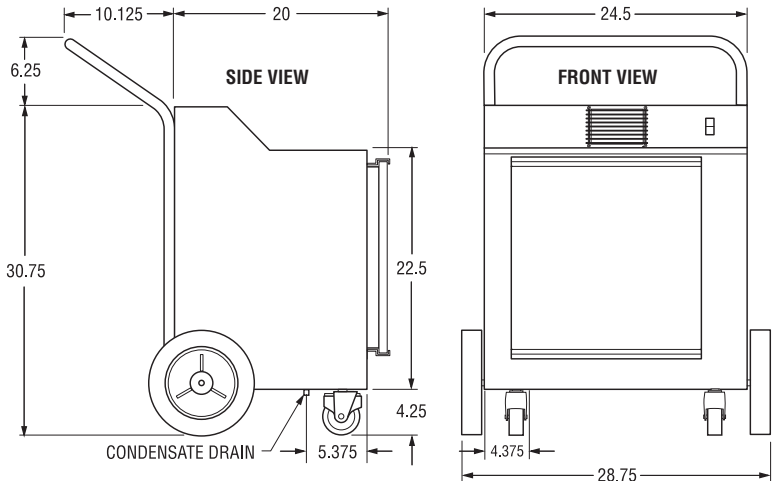

HPR Floor Standing Dimensions

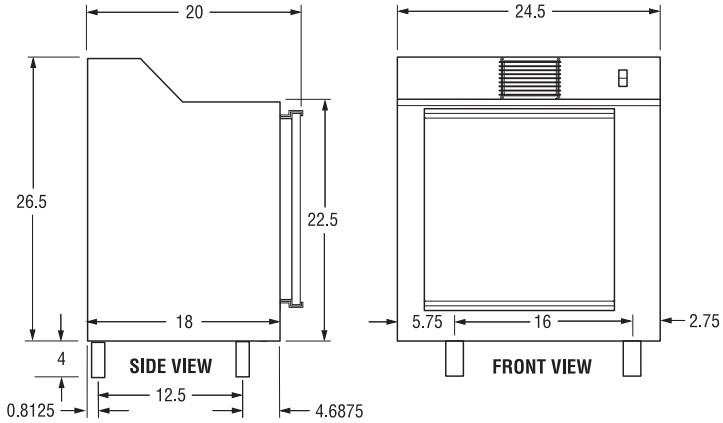

HPR Wall Mount Dimensions

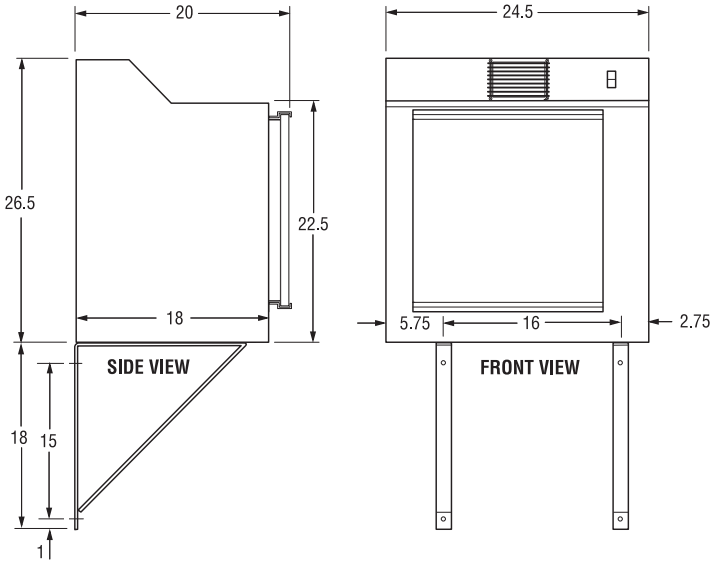

For more information visit www.desert-aire.com

HPR 120 Specification and Description

1. **Enclosure:** The frame, panels and removable access panels will be constructed of 16- or 18-gauge Galvanneal steel. The base panel shall be 12-gauge Galvanneal steel. Removable panels will be provided to allow easy access to internal parts.

2. **Paint and Finish:** All metal parts will be painted using the following process:
   Application of an alkaline cleaner and zinc phosphate.
   Clear water rinse.
   Application of rinse sealant.
   Oven dry rinse sealant to provide a clean, dry surface for painting.
   Application of 1-1/2 to 3 mils powder coat paint.
   Powder coat is oven cured per paint manufacturer's specifications.

3. **Corrosion Protection:** All cabinet panels will be constructed of zinc-iron coated Galvanneal steel and exhibit a spangle-free matte tan, uniform appearance.

4. **Approvals/Listings:** The unit shall be tested and approved in accordance with UL 474.

5. **Evaporator (Dehumidifier Coil):**

   5.1 Fins: Fins will be die formed, plate type tempered aluminum for easy cleaning and will be damage resistant. Fins will have extruded fin collars to provide maximum heat transfer.

   5.2 Tubes: Coil tubes will be fabricated from seamless drawn copper. The tubes will be mechanically expanded into the tubes to form a permanent metal to metal bond for maximum heat transfer and stability.

   5.3 Headers: All manifolds, headers and connecting tubing will be made with heavy wall seamless copper tubing.

   5.4 Testing: Coils will be leak tested with 625 psig nitrogen and sealed to prevent contamination.

6. **Condenser (Reheat Coil):**

   6.1 Fins: Fins will be die formed, plate type tempered aluminum for easy cleaning and will be damage resistant. Fins will have extruded fin collars to provide maximum heat transfer.

   6.2 Tubes: Coil tubes will be fabricated from seamless drawn copper. The tubes will be mechanically expanded into the tubes to form a permanent metal to metal bond for maximum heat transfer and stability.

   6.3 Testing: Coils will be leak tested with 625 psig nitrogen and sealed to prevent contamination.

7. **Refrigeration Options:** The unit will be provided in the following configuration (provided if check box is marked):

☐ Qty. ___ **Standard Version:** Unit will be equipped with low ambient compensation valve to prevent system damage due to low load. Hot gas bypass valve will be sized to prevent evaporator coil freeze-up regardless of entering air temperature or humidity level.

☐ Qty. ___ **Low Temperature Feature:** Unit will be equipped with a demand defrost system. Evaporating temperatures will be capable of dropping below 32°F to maximize moisture removal during low load. The demand defrost system will monitor conditions at the evaporator, activating and deactivating the evaporator defrost cycle on an as-needed basis.

8. **ElectroFin® Coil Coating Option:** The unit(s) shall include the following option (provided if check box is marked):

☐ Qty. ___ All coils shall be coated with ElectroFin® protective coating on Standard Version units.

☐ Qty. ___ All coils shall be coated with ElectroFin® protective coating on Low Temperature units.

9. **Compressor:** The compressor will be a heavy-duty, fully hermetic, rotary type. The compressor is equipped with a high-pressure safety switch and is internally protected from overheating. The compressor will be vibration isolated internally and externally. The compressor is covered by a standard factory two-year warranty.

Electrical Diagrams

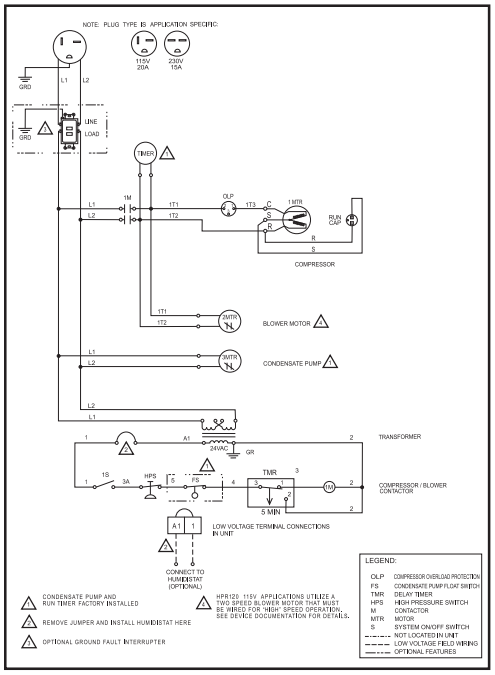

Figure 1 – HPR 120 Standard Unit Electrical Control Schematic Rev. 0

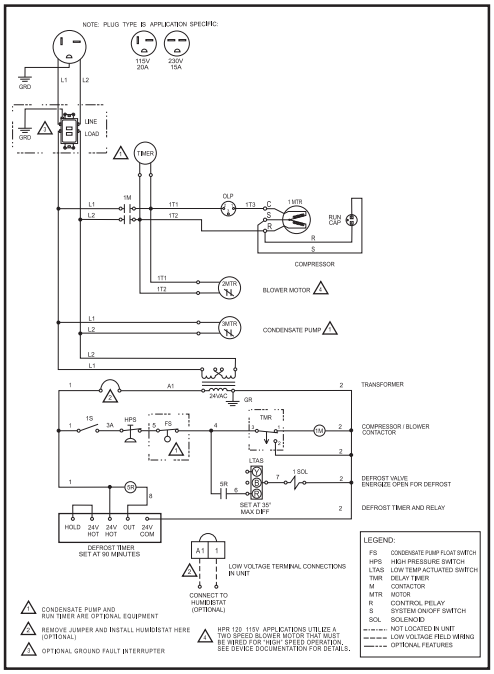

Figure 2 – HPR 120 Low Temperature Unit Electrical Control Schematic Rev. 0

Dehumidify with the Experts!

N120 W18485 Freistadt Road, Germantown, WI 53022 FAX: (262) 946-7401

(262) 946-7400 - www.desert-aire.com