Installation and Operations Manual

Bulletin H-IM-RACC | August 2007 | Part Number 2500018

Replaces H-IM-73A and H-IM-43B

Remote Air-Cooled Condenser

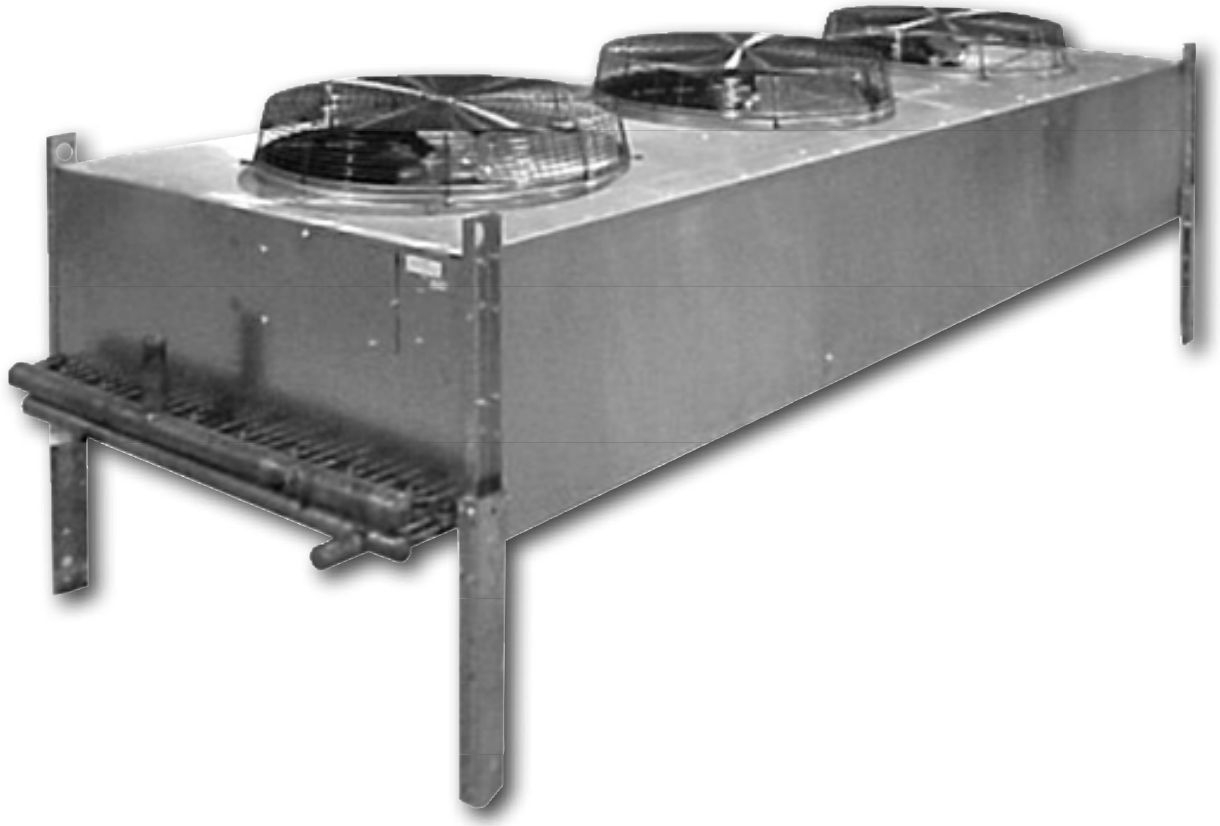

Table of Contents

Inspection 2
Rigging and Moving Units
Installation Requirements
Unit Location
Space and Location Requirements 3
Walls or Obstructions
Units in Pits
Multiple Units
Decorative Fences
Sound Vibration
Vertical and Horizontal Condenser Assembly 4
Typical Piping Arrangements 5
Installation, Refrigerant Piping
Electrical Wiring 6
Start Up 8
Operation
Winter Operation Head Pressure Control
Fan Cycling Method
Fan Cycling Operation and Installation
Variable Speed
Flooded Head Pressure Control Valve 9
Operation
Piping
Maintenance
Cleaning Instructions
System Warranty 11
In-Warranty Return Materials Procedure
Condenser Specifications 12-13
General Fan Layout
Dimensions
Replacement Parts by InterLink™ 14

Inspection

Shipment should be checked against the bill of lading to verify that all items listed have been received. All parts should be carefully inspected to determine if any damage was incurred in shipment.

Any shortage and/or claims for damage should be immediately reported to the delivering carrier, followed by filing a claim for shortages and/or damages.

When uncrating, care should be taken to prevent damage. Heavy equipment should be left on its shipping base until it has been moved to the final location.

Rigging and Moving Units

The exact method of handling and setting the unit depends on available equipment, size of unit, final location and other variables. It is the judgement of the riggers and movers to determine the specific method of handling each unit.

All units are shipped on heavy skids and enclosed in open crating. Generally, it is advisable to bring the unit as close to its final location as possible before removing crating.

Units are provided with lifting ears near the four corners. Under no circumstances should the coil headers or return bends be used for moving these units.

NOTE FOR ALL MODELS: Spreader bars must be used (contractor-supplied). Safety slings should be used when making lift.

Figure 1: Suggested Rigging

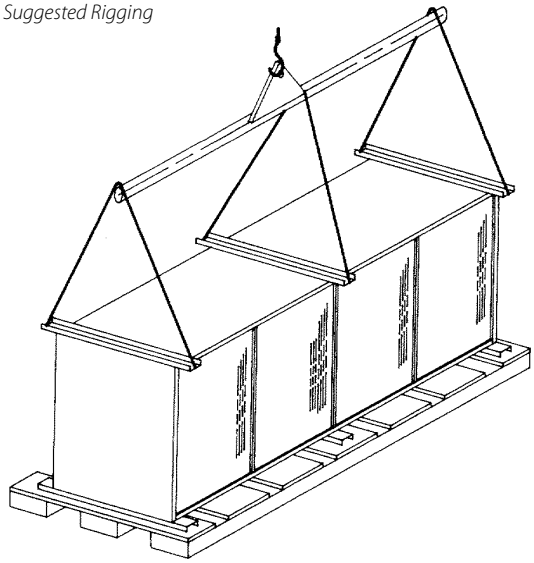

Figure 2: Leg Mounting

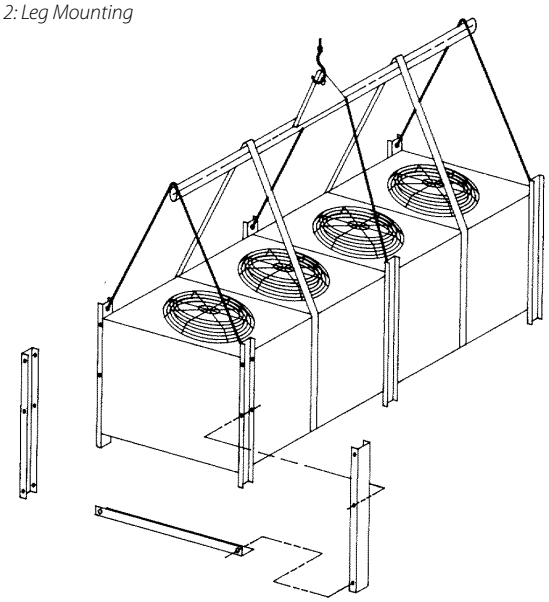

Installation Requirements

NOTE: Installation and maintenance to be performed only by qualified personnel who are familiar with local codes and regulations and are experienced with this type of equipment.

CAUTION: Sharp edges and coil surfaces are a potential injury hazard. Avoid contact with them.

WARNING: This equipment may contain a substance that harms public health and the environment by destroying ozone in the upper atmosphere. Venting of certain refrigerants to the atmosphere may be illegal in your location. Refrigerant recovery devices should be used when installing or servicing this product. Consult your local codes for requirements in your location.

WARNING: Refrigerant can be harmful if it is inhaled. Refrigerant must be used and recovered responsibly. Failure to follow this warning may result in personal injury or death.

Unit Location

Units are designed for outdoor application and may be mounted on a roof or concrete slab (ground-level installation). Concrete slabs used for unit mounting should be installed level and be properly supported to prevent settling. A one-piece concrete slab with footings extending below the frost line is recommended.

Roof-mounted units should be installed level on steel channels or an I-beam frame to support the unit above the roof. Use of vibration pads or isolators is recommended. The roof must be strong enough to support the weight of the unit.

© 2007 Heatcraft Refrigeration Products LLC

The condenser should be located no closer than four feet from any wall or other obstruction to provide sufficient clearance for air entrance. Do not attach ductwork to the coil inlet or fan outlet. Care should be taken to avoid air recirculation conditions that can be caused by sight screening, walls, etc. Keep unit fan discharge away from any building air intakes.

Space and Location Requirements

The most important aspect in selecting a location for air-cooled equipment is a supply of ambient air to the condenser and the adequate removal of heated air from the condenser area. If the requirement for adequate air circulation is not adhered to, higher head pressures will result, creating poor operation and possible failure of equipment. Units must not be located in the vicinity of steam, hot air or fume exhausts.

Walls or Obstructions

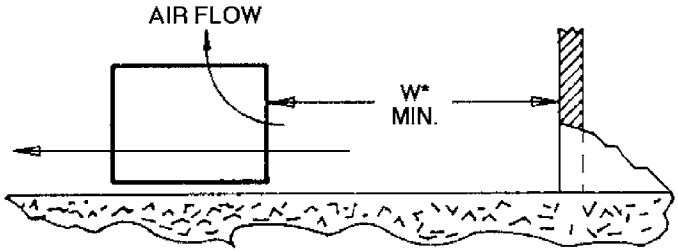

The unit should be located so that air may circulate freely and not be recirculated. For proper air flow and access, all sides of the unit should be a minimum of the width of the unit away from any wall or obstruction. It is preferable for this distance be increased whenever possible.

Care should be taken to see that ample room is left for maintenance through access doors and panels. Overhead obstructions are not permitted. When the unit is in an area where it is enclosed by three walls the unit must be installed as indicated for units in a pit.

Units In Pits

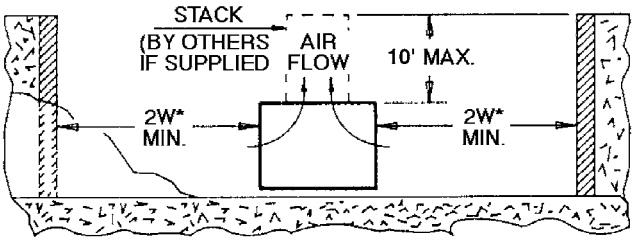

The top of the unit should be level with the top of the pit and side distance increased to two times the width of the unit.

If the top of the unit is not level with the top of pit, discharge cones or stacks must be used to raise discharge air to the top of the pit. This is a minimum requirement.

Multiple Units

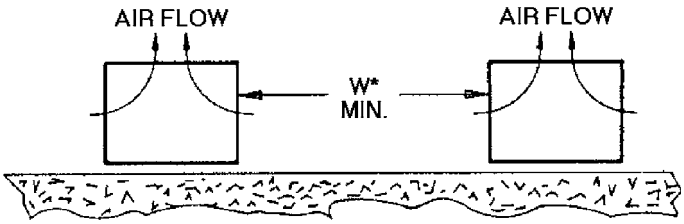

For units placed side by side, the minimum distance between units is the width of the largest unit. If units are placed end to end, the minimum distance between units is four feet.

Decorative Fences

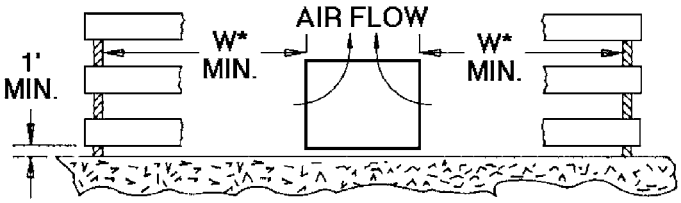

Fences must have 50 percent free area, with a one-foot undercut, a minimum clearance equal to the width of the unit and must not exceed the height of the unit. If these requirements are not met, unit must be installed as indicated for units in pits.

Sound and Vibration

Units should be installed away from occupied spaces to reduce the transmission of sound and vibration to occupied spaces. Units should be mounted over corridors, utility areas, rest rooms and other auxiliary areas where high levels of sound are not an important factor. Sound and structural consultants should be retained for recommendations.

The refrigerant piping should be flexible enough to prevent the transmission of noise and vibration from the unit into the building. If the refrigerant lines are to be suspended from the structure of the building, isolation hangers should be used to prevent the transmission of vibration.

Where piping passes through a wall, it is advisable to pack fiberglass and sealing compound around the lines to minimize vibration and retain flexibility in the lines. The unit needs to be secured in its final location. Holes are provided in the base runner for this purpose.

**W = Total width of the condenser.*

Vertical Condenser

Vertical airflow units should be located no closer than the width of the unit from a wall or other obstruction. If two or more units are to be positioned in the same area, a similar distance should be maintained between adjacent units. Sufficient free area should be left around and below unit to avoid air restriction to coil.

Leg Assembly for Vertical Airflow Installation (Models 008-016; 1-3)

Figure 3. Leg assembly (vertical airflow, models 008-016; 1-3)

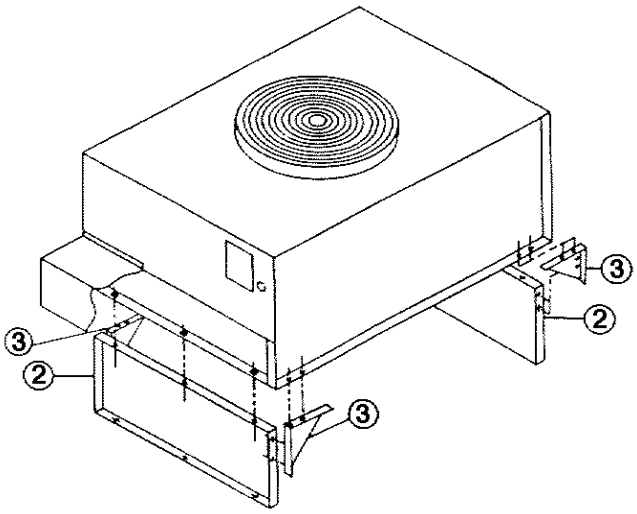

1. Assemble the unit's two legs (Figure 3, item 2) using three 1/4 - 20 x 3/4" long bolts per leg. Captive nuts are provided on unit for this assembly.
2. Four gussets (Figure 3, item 3) are provided for leg support.
3. Assemble the gusset in each corner with 1/4 - 20 x 3/4" long bolts and 1/4" nuts.
4. Discard the four mounting angles (Figure 5, item 1).

Leg Assembly for Vertical Airflow Installation (Models 024-133; 5-26)

Figure 4. Leg assembly (vertical airflow, models 024-133; 5-26)

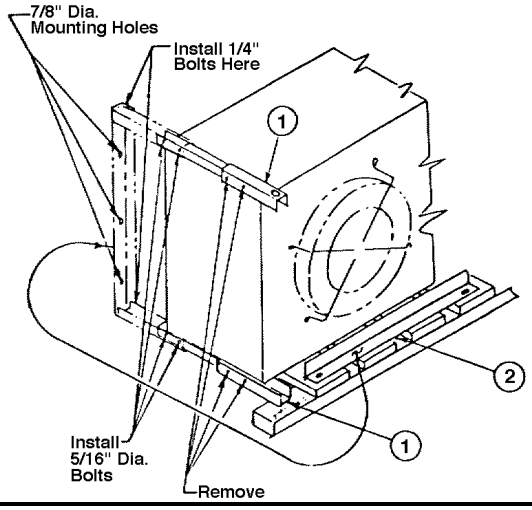

1. Remove fasteners securing condenser to skid.
2. Remove leg extensions (Figure 4, item 1) by removing four 5/16" x 3-1/2" bolts.
3. Install as shown in dotted lines with same four bolts.
4. Install mounting angle (item 2) as shown (dotted lines) with four 1/4 - 20 x 3/4" bolts provided.
5. Condenser can be hoisted by attaching hooks into 1-1/2" holes in leg assemblies.

Horizontal Condenser

Horizontal airflow units should be installed with the coil (inlet air side) facing the prevailing winds. Where strong winds are common, it is recommended that a wind deflector (not supplied) be used to discharge the air vertically from the unit, to prevent capacity loss during varying wind conditions. The wind deflector should be installed on the fan side of the unit.

If horizontal airflow units are installed with the air inlet facing a wall, a distance of at least 48 inches should be maintained between unit and wall. If it is necessary to have the unit positioned so the air discharge is toward a wall, it should be spaced at a distance no less than three times the coil face height from the wall.

Leg Assembly for Horizontal Airflow Installation (Models 008-016; 1-3)

Figure 5. Leg assembly (horizontal airflow, models 008-016 ; 1-3)

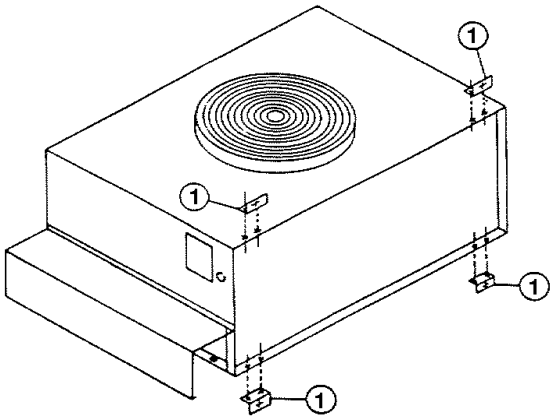

1. Attach four mounting angles (Figure 5, item 1) to the unit, using two 1/4 - 20 x 3/4" long bolts and 1/4" nuts per mounting angle.
2. Discard the two legs, (Figure 3, item 2) and four gussets (Figure 3, item 3).

Leg Assembly for Horizontal Airflow Installation (Models 024-133; 5-26)

Figure 6. Leg assembly (horizontal airflow, models 024-133; 5-26)

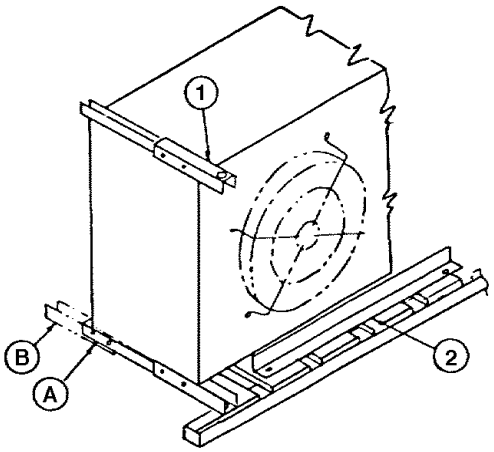

1. Remove bolts securing condenser to skid.
2. Remove item 1 and attach to rear of bottom leg (item A) to complete mounting base. Item 2 is not required in the horizontal discharge application and may be discarded.
3. Condenser can be hoisted by the 1-1/2" holes in leg assemblies.

Typical Piping Arrangements

Figure 7 illustrates a typical piping arrangement with a remote condenser located at a higher elevation, common when the condenser is on a roof and the compressor and receiver are on grade level or in a basement equipment room.

Figure 7

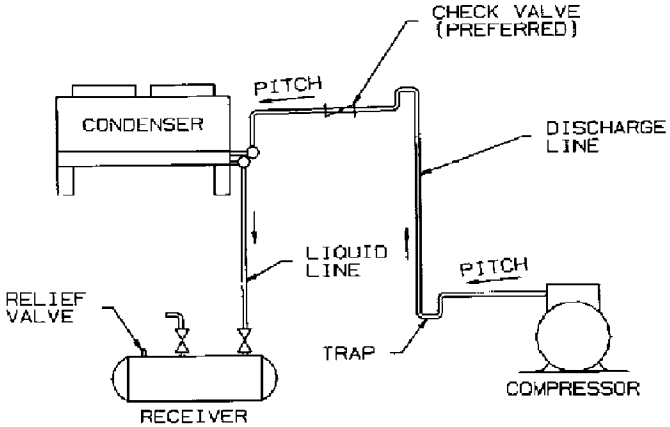

In this case, the design of the discharge line is very critical. If properly sized for full load conditions, the gas velocity might be too low at reduced loads to carry oil through the discharge line and condenser coil. Reducing the discharge line size would increase the gas velocity sufficiently at reduced load conditions; however, when operating at full load, the line would be greatly undersized and create an excessive refrigerant pressure drop.

This condition can be overcome in one of two following ways:

1. The discharge line may be properly sized for the desired pressure drop at full load conditions and an oil separator installed at the bottom of the trap in the discharge line from the compressor.
2. A double riser discharge line may be used as shown in Figure 8. Line A should be sized to carry the oil at minimum load conditions and Line B should be sized so that at full load conditions, both lines would have sufficient flow velocity to carry the oil to the condenser.

Figure 8

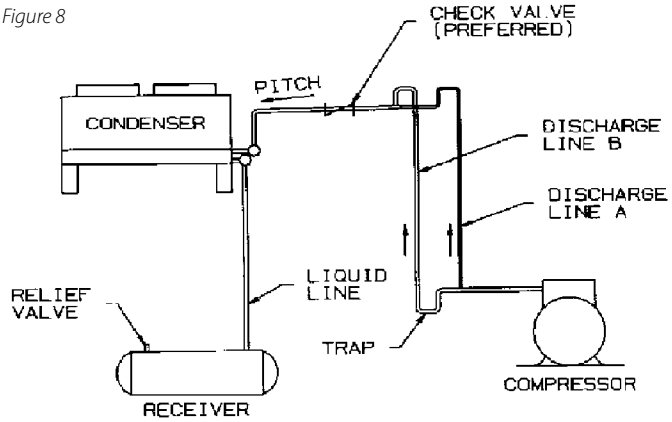

For more complete information, please refer to the ASHRAE Handbook on Systems.

NOTES:

1. **All oil traps are to be as short in radius as possible. Common practice is to fabricate the trap using three 90-degree ells.**
2. **Pressure relief valves are recommended at the condenser to protect the coil.**
3. **A drain line check valve is recommended for applications where the condenser may be at a lower temperature than the receiver.**

See Tables 1, 2, and 3 for discharge and liquid drain line size recommendations for remote condenser selections.

Installation, Refrigerant Piping

Install piping according to standard accepted refrigeration practice. The following recommendations should be adhered to:

1. Use only refrigeration-grade copper tubing.
2. Soft solder joints are not acceptable.
3. Put dry nitrogen through lines while brazing.
4. Do not leave dehydrated piping or components open to the atmosphere any longer than is necessary.

Table 1. **Tons of Refrigeration, Discharge**

Line Size (Type L Copper OD)	Discharge Line								
	R-22			R-404A/R-507			R-410A		
	Sat. Suction Temp (°F)			Sat. Suction Temp (°F)			Sat. Suction Temp (°F)		
	-40	0	40	-40	0	40	-40	0	40
1/2	0.75	0.80	0.85	0.61	0.70	0.79	1.17	1.26	1.33
5/8	1.40	1.50	1.60	1.14	1.31	1.48	2.20	2.36	2.49
7/8	3.70	4.00	4.20	2.98	3.44	3.87	5.76	6.12	6.52
1-1/8	7.50	8.00	8.50	6.01	6.96	7.81	11.64	12.50	13.17
1-3/8	13.10	14.00	14.80	10.46	12.10	13.58	20.21	21.72	22.88
1-5/8	20.70	22.00	23.40	16.49	19.07	21.41	31.92	34.30	36.14
2-1/8	42.80	45.70	48.50	34.08	39.43	44.26	65.88	70.78	74.57
2-5/8	75.40	80.40	85.40	59.95	69.36	77.85	115.90	124.53	131.20
3-1/8	120.20	128.20	136.20	95.48	110.47	124.00	184.62	198.36	208.98
3-5/8	178.40	190.30	202.10	141.46	163.67	183.71	273.54	293.90	309.69

Source: ASHRAE Refrigeration Handbook.

1. *Line sizes based on pressure drop equivalent to 1°F per 100 equivalent feet.*
2. *Values in table are based on 105°F condensing temperature. Multiply table capacities by the factors in Table 2 for other condensing temperatures.*
3. *If subcooling is substantial or the line is short, a smaller line size may be used. Applications with very little subcooling or very long lines may require larger sizes.*

Table 2. **Condensing Temperature Correction Factor**

Temp.	Discharge Line		
	R-22	R-404A/ R-507	R-410A
90	0.88	0.92	0.89
100	0.95	0.97	0.96
110	1.04	1.01	1.03
120	1.10	1.03	1.10
130	1.18	1.04	1.16

Table 3. **Tons of Refrigeration, Drain**

Line Size (Type L Copper OD)	Drain Line Velocity 100 FPM Refrigerant		
	R-22	R-404A/ R-507	R-410A
1/2	2.30	1.50	2.00
5/8	3.70	2.30	3.20
7/8	7.80	4.90	6.70
1-1/8	13.20	8.30	11.40
1-3/8	20.20	12.60	17.40
1-5/8	28.50	17.90	24.60
2-1/8	49.60	31.10	42.60
2-5/8	76.50	48.00	66.00
3-1/8	109.20	68.40	94.20
3-5/8	147.80	92.60	127.40
4-1/8	192.10	120.30	165.70

Tables 1, 2 and 3 provide recommendations for discharge and liquid drain line sizes for remote condenser selections.

Electrical Wiring

The electrical installation should be in accordance with National Electrical Code, local codes and regulations. Proper overcurrent protection should be provided for the fan motors. Wiring diagrams shown are only basic and do not show fuses, disconnect switches, etc., which must be provided in the field.

All standard motors have internal inherent overload protectors. Contactors can be used instead of starters requiring thermal protectors, eliminating the problem of furnishing the proper heating elements.

All air-cooled condensers are furnished with either single-phase or three-phase fan motors, identified by the unit data plate. Three-phase motors must be connected to three-phase power voltage to agree with motor and unit data plate.

The motors must be checked for proper rotation. Be sure to check that motor voltage and control connection agree with electric services furnished. The motors are wired into a common junction box. Where fan cycling is furnished and factory installed, the motors are completely wired through the control and to the contactors.

Electrical leads from each motor terminate at the unit junction box. Field connections must be made from these leads through a contactor, fuse and disconnect in accordance with local, state and national codes.

Diagram 1. Typical Wiring Diagram for Models 1-3.

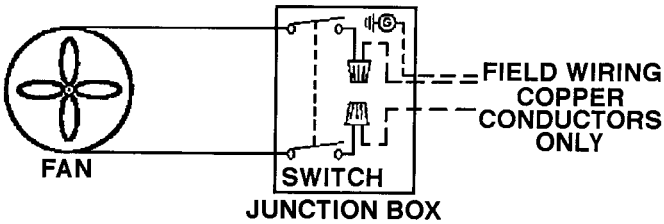

Diagram 2. Typical Wiring Diagram for 208-230/1/60

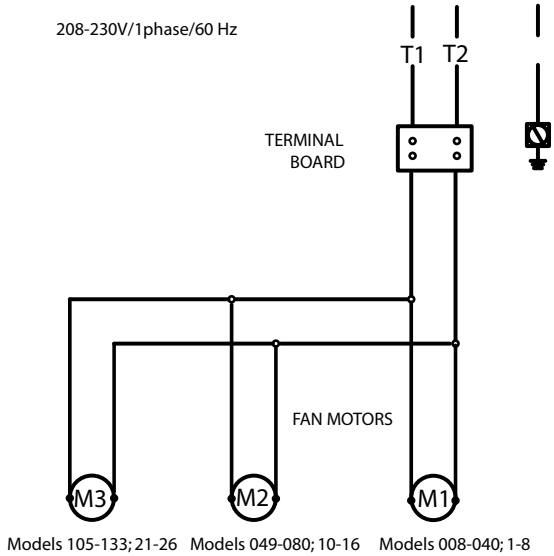

Diagram 3. Typical Wiring Diagram for 208-230/1/60 with Fan Cycling.

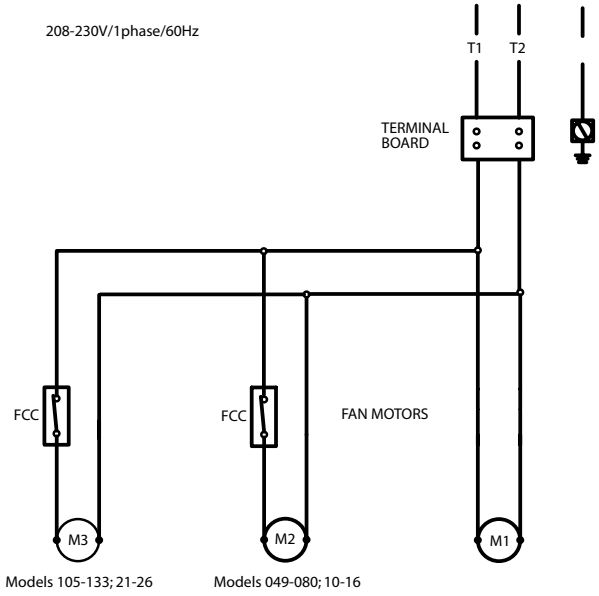

Diagram 4. Typical Wiring Diagram for 208-230-460/3/60

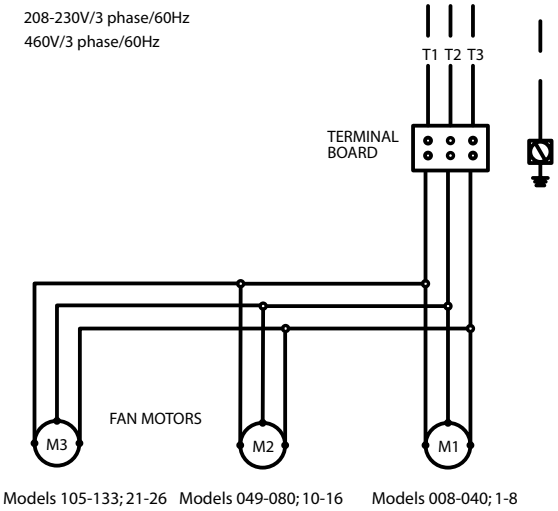

Diagram 5. Typical Wiring Diagram for 208-230-460/3/60 with Fan Cycling

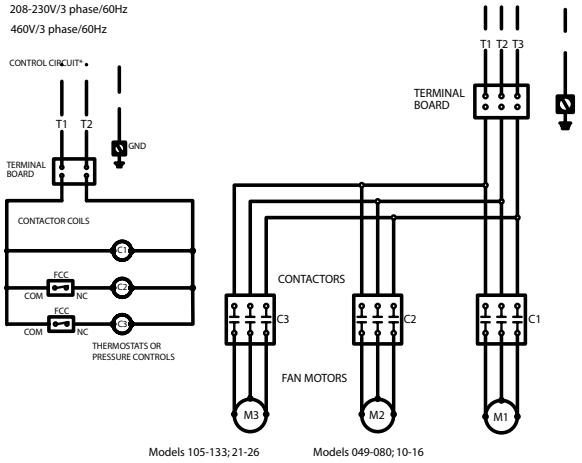

CONTROL CIRCUIT: May be 24 volt, 120 volt, or 230 volt (as specified).

WARNING: There may be more than one source of electrical current in this unit. Do not service before disconnecting all power supplies.

Start Up

Check for proper fan rotation. Air is drawn through the coil on all units. Be sure the fans turn freely. Rotation of the motors and blades should be in a clockwise direction looking at the unit from the blade side. On three-phase units, it may be necessary to reverse two of the three power leads to the unit.

NOTE: The manifold assembly is not designed to support field piping. Any damages to the condenser due to excessive weight, pressure or vibration will not be covered by standard warranty.

Operation

Winter Operation Head Pressure Control

The capacity of an air-cooled condenser varies with the difference between the entering air dry bulb temperature and the condensing temperature of the refrigerant.

Because air temperature in some regions varies as much as 100 degrees from summer to winter, some means must be employed to keep the condensing temperature sufficiently high to ensure proper operation of the refrigerant expansion valve during low ambient operation, and also allow sufficient capacity so that excessively high condensing temperatures do not result during high ambient conditions. The low limit of the head pressure is dependent upon the required pressure drop across the thermostatic expansion valve.

For normal air conditioning applications, head pressure should be maintained above a condensing temperature corresponding to 90°F. This corresponds to a normal lower limit of about 60°F ambient air. Because air conditioning is not normally required at these lower ambient temperatures, condenser head pressure control may not always be necessary.

However, for those applications below 60°F ambient air temperature, two methods of condenser head pressure control are available to meet specific job requirements and engineer/owner preference: **Fan Cycling, Variable Speed and Flooded Head Pressure Control (FHP).**

Fan Cycling Method

This is an automatic winter control method and will maintain a condensing pressure within reasonable limits by cycling fan motors in response to outside air temperature entering the condensing coil. When voltage other than 230/208 is supplied to the unit, a transformer will be provided for field installation. Electrical protection must be provided for this transformer.

Fan Cycling Operation and Installation

The fan cycling control package consists of a weather-tight enclosure with motor starting contactor(s), as required, and thermostat(s). The contactor coil is 24 volts, 115 volts or 240 volts as ordered. The thermostats and contactors are wired as shown on Diagrams 3 and 5.

Factory-installed packages are mounted on the unit and have all motor connections completed. Field wiring consists of connecting this panel to a power supply and fused disconnect(s) together with the control circuit to the contactor coils.

Fan cycling is suitable for outside temperatures above those shown in Table 4. The thermostat should be field set to shut off the fan when the condensing temperature is reduced to approximately 90°F.

Where operation at ambients below the range shown on Table 4 were required, FHP must be added.

Table 4. Minimum Ambient for Fan Cycling

Model	Design T.D.			
	30°F	25°F	20°F	15°F
2-fan units	45	55	65	70
3-fan units	30	40	50	60

Table 5 lists approximate settings for several system T.D.'s. These settings are approximate as they do not take into account variations in load.

Table 5. Fan Cycling Thermostat Settings

Model	Design T.D. (°F)	Thermostat Settings	
		T1	T2
2-fan units	30	55	-
	25	60	-
	20	65	-
3-fan units	30	60	45
	25	65	50
	20	75	55
	15	75	65

NOTE: Fans closest to the headers should not be cycled on standard temperature or pressure controls. Dramatic temperature and pressure changes at the headers as a result of fan action can result in possible tube failure. Fan motors are designed for continuous duty operation. Fan cycling controls should be adjusted to maintain a minimum of five (5) minutes on and five (5) minutes off. Short cycling of fans may result in a premature failure of motor and/or fan blade.

Variable Speed

Condenser head pressure control is provided by varying the air flow through the condenser by changing the RPM of the condenser fan. This control package is offered in combination with ambient fan cycling. The fan motor next to the header end of the condenser is the variable speed fan. The remainder

of the fans are constant speed and are cycled separately using ambient sensing thermostats.

Flooded Head Pressure Control Valve (FHP)

The FHP system of head pressure control is a completely automatic control that maintains a preset condenser pressure without need of seasonal adjustment. The control maintains head pressure by backing liquid into the leaving side of the condenser, decreasing the effective condenser surface and therefore maintaining a constant head pressure upon a drop in ambient temperature.

Several styles of flooding valves or combinations of valves are available. Contact the valve manufacturer for specific recommendations.

Operation:
During normal ambient operation, the valve allows liquid refrigerant to flow through C port *(see Figure 9)* and R port to the liquid receiver.

Figure 9.

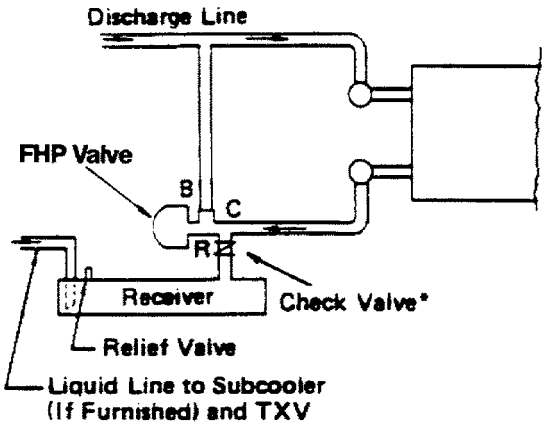

***If receiver is located in a warm ambient, a check valve in this location may be required to prevent receiver gas from migrating into the condenser during the off cycle.**

As the pressure drops with a drop in ambient temperature, the valve opens to allow high pressure discharge gas to enter B port, pass through the valve and pressurize the receiver to provide adequate liquid flow to the expansion valve.
(see Figure 10)

This action raises the pressure on the discharge side of the condenser, reducing flow and flooding the leaving side of the condenser until the pressure rises to a proper level to close B port. The liquid receiver size is important in this type of control and must be large enough to hold the total system charge. If the receiver is not large enough, the liquid will be stored in the condenser causing high head pressure at normal ambient temperatures.

Figure 10.

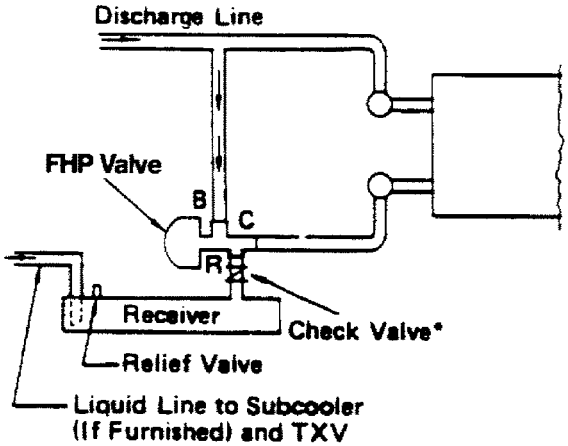

The refrigerant charge required will often be about two times the normal charge for cold weather operation. The amount of refrigerant that must be added to a system for winter or cold weather operation is determined by *Tables 6, 7 and 8.*
(see page 10)

Piping:
As on all systems, refrigerant migration must be prevented when using FHP. If the receiver is in a warm location, a check valve should be placed in the line between the FHP valve and the receiver. Good piping practice suggests a trap in the compressor discharge line and an inverted trap at the condenser outlet. Multiple valve applications must have valves piped in parallel.

Maintenance

Air-cooled condensers require minimum maintenance. The unit coil will require a periodic cleaning and this can be accomplished by a brush, vacuum cleaner, pressurized irstream or a commercially available coil cleaning foam.

All of the condenser fan motors have sealed ball bearings. The only acceptable service to these bearings is replacement.

Cleaning Instructions

Heatcraft recommends that the finned surface of this unit be cleaned approximately every six months; more frequent cleaning may be required if extreme conditions cause clogging or fouling of air passages through the finned surface.

Calgon Corporation's CalClean 41352 (or equal) should be acceptable for cleaning this unit. CalClean should be applied liberally to entering air and leaving air surfaces of the finned area in accordance with the label directions.

CAUTION: Under no circumstances should this unit be cleaned with an acid-based cleaner.

Table 6. **FHP Charge Factor; T.D. 25 and 30 ˚F**

Minimum Ambient	Additional Charge Factor	
	25 T.D. °F	30 T.D. °F
+60°F	0.66	0.33
+40°F	0.85	0.71
+20°F	0.91	0.81
0°F	0.93	0.86
-20°F	0.95	0.90

Table 7. **Refrigerant Charge, R-22 (lbs.)**

Model			Standard R-22 Charge	Additional Lbs. R-22 Charge for FHP at 20° T.D. °F Minimum Ambient at Condenser*				
WSS	DVT	FCB		+50°F	+40°F	+20°F	0°F	-20°F
008	001	1	1.0	1.0	1.0	1.0	1.0	1.0
009	—	1.5	1.0	2.0	2.0	2.0	2.0	2.0
010	002	2	1.5	2.0	2.5	2.5	2.5	3.0
016	003	3	3.5	4.0	4.5	4.5	5.0	5.0
024	005	5	5.0	6.0	6.5	7.5	7.5	8.0
040	008	8	9.0	10.5	11.5	12.5	13.0	13.5
049	010	10	10.0	11.5	12.5	14.0	14.5	15.0
061	012	12	9.5	12.0	13.0	14.5	15.0	15.5
070	014	14	12.5	16.0	17.5	19.0	20.0	20.5
080	016	16	17.5	21.0	23.0	25.0	26.0	27.0
105	021	21	19.0	24.0	26.0	28.0	29.0	30.0
113	023	23	19.0	24.0	26.0	28.0	29.0	30.0
133	026	26	25.0	32.0	35.0	38.0	39.0	40.5

For R-134a, multiply charge by 1.01. For R-404A, multiply charge by 0.91. For R-410A, multiply charge by 0.93. For alternate T.D.'s, multiply by flooded charge factors in Table 6.

Table 8. **Additional lbs. R-22 Charge for FHP and Fan Cycling Combination**

Model			25 T.D. °F				20 T.D. °F				15 T.D. °F			
WSS	DVT	FCB	40 ˚F SST	20 ˚F SST	0 ˚F SST	-20 ˚F SST	40 ˚F SST	20 ˚F SST	0 ˚F SST	-20 ˚F SST	40 ˚F SST	20 ˚F SST	0 ˚F SST	-20 ˚F SST
049	010	10	4.5	10.0	13.6	16.3	8.1	12.7	16.3	18.2	12.7	16.3	18.2	20.0
061	012	12	4.5	10.0	13.6	16.3	8.1	12.7	16.3	18.2	12.7	16.3	18.2	20.0
070	014	14	5.5	12.7	18.2	21.8	10.9	17.2	21.0	23.6	16.3	21.8	24.5	27.3
080	016	16	7.3	17.2	23.6	28.2	13.6	22.7	28.2	31.8	21.8	28.2	32.7	36.4
105	021	21	0.0	7.3	17.2	23.6	4.5	16.3	23.6	30.0	15.5	24.5	31.0	34.5
113	023	23	0.0	7.3	17.2	23.6	4.5	16.3	23.6	30.0	15.5	24.5	31.0	34.5
133	026	26	0.0	11.0	22.8	31.8	5.5	21.8	31.9	40.0	20.0	32.8	40.1	47.3

For R-134a, multiply charge by 1.01. For R-404A, multiply charge by 0.91. For R-410A, multiply charge by 0.93. For alternate T.D.'s, multiply by flooded charge factors in Table 6.

System Warranty

This equipment is designed to operate properly and produce rated capacity when installed in accordance with accepted industry standards.

Failure to meet the following conditions may result in voiding of the system warranty:

1. System piping must be installed following industry standards for good piping practices.
2. Inert gas must be charged into piping during welding.
3. System must be thoroughly leak-checked and evacuated before initial charging. High vacuum gauge capable of reading microns is mandatory. Dial indicating pressure gauges are not acceptable.
4. All controls and safety switch circuits properly connected per wiring diagram.
5. Factory-installed wiring must not be changed without written factory approval.
6. Power supply to the system must meet the following conditions:
   a. Voltage for 208/230 motors not less than 185 volts or more than 253 volts. For 460 motor, not less than 414 or greater than 506.
   b. All other voltages must not exceed ±10 percent of nameplate ratings.
   c. Phase imbalance not to exceed 2 percent.

In-Warranty Return Material Procedure

Material may not be returned except by permission of authorized factory service personnel of Heatcraft Refrigeration Products LLC in Stone Mountain, Georgia, USA. A Return Goods tag will be sent to be included with the returned material. Enter the information as called for on the tag in order to expedite handling at our factories and prompt issuance of credits. All parts shall be returned to the factory designated on the Return Goods tag, transportation charges prepaid.

The return of a part does not constitute an order for replacement. Therefore, a purchase order must be entered through your nearest Heatcraft Refrigeration Products representative. The order should include part number, model number and serial number of the unit.

General Fan Layouts

Figure 11. Model 008-040, 1-8

Figure 12. Model 049-080, 10-16

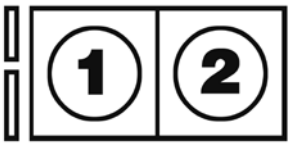

Figure 13. Model 105-133, 21-26

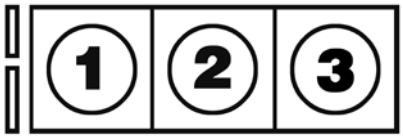

Condenser Specifications

Table 9. Specifications

Model			Dimensions		CFM	No. Fans	Dia. (in.)	Motor Data				Connections (ODS)		Net Wt. (lbs.)
WSS	DVT	FCB	A	B				HP[1]	FLA[1]	HP[2]	FLA[2]	Inlet	Outlet	
008	001	1	—	—	2,400	1	18	1/4	2	—	—	3/8	3/8	96
009	—-	1.5	—	—	2,400	1	18	1/4	2	—	—	5/8	5/8	96
010	002	2	—	—	2,400	1	18	1/4	2	—	—	7/8	5/8	96
016	003	3	—	—	2,100	1	18	1/4	2	—	—	7/8	5/8	114
024	005	5	40	30	5,050	1	24	1/3	3.4	1/3	2.6/1.3	1-1/8	7/8	180
040	008	8	50	40	6,450	1	26	1/2	3.9	1/3	2.6/1.3	1-1/8	7/8	260
049	010	10	70	60	10,100	2	24	1/3	6.8	1/3	5.2/2.6	(2)1-1/8	(2)7/8	450
061	012	12	70	60	12,400	2	26	1/2	7.8	1/3	5.2/2.6	(2)1-1/8	(2)7/8	470
070	014	14	90	80	13,700	2	26	1/2	7.8	1/3	5.2/2.6	(2)1-1/8	(2)7/8	510
080	016	16	90	80	12,900	2	26	1/2	7.8	1/3	5.2/2.6	(2)1-3/8	(2)1-1/8	530
105	021	21	130	120	20,500	3	26	1/2	11.7	1/3	7.8/3.9	(2)1-5/8	(2)1-1/8	550
113	023	23	130	120	19,900	3	26	1/2	11.7	1/3	7.8/3.9	(2)1-5/8	(2)1-1/8	580
133	026	26	130	120	19,400	3	26	1/2	11.7	1/3	7.8/3.9	(2)1-5/8	(2)1-1/8	625

[1] Motor voltage 208-230/1/60; 1075 RPM

[2] Motor voltage 208-230-460/3/60; 1140 RPM

NOTE: Model 008-010, 1-2; available in 115/1/60 voltage; model 024-133, 5-26 available in 575/3/60 voltage

Diagram 6. Dimensions for Models 008-016, 1-3

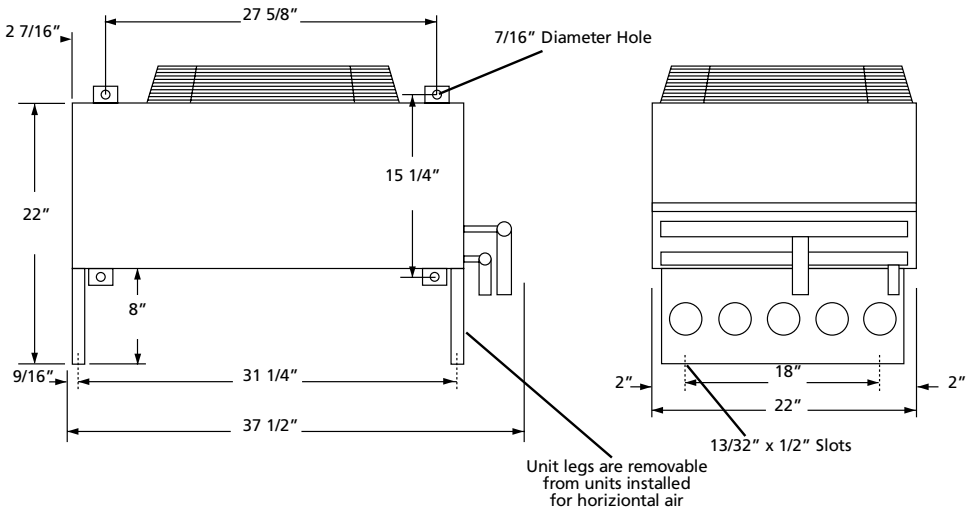

Diagram 7. **Dimensions for Models 024-133, 5-26 with Vertical Air Flow**

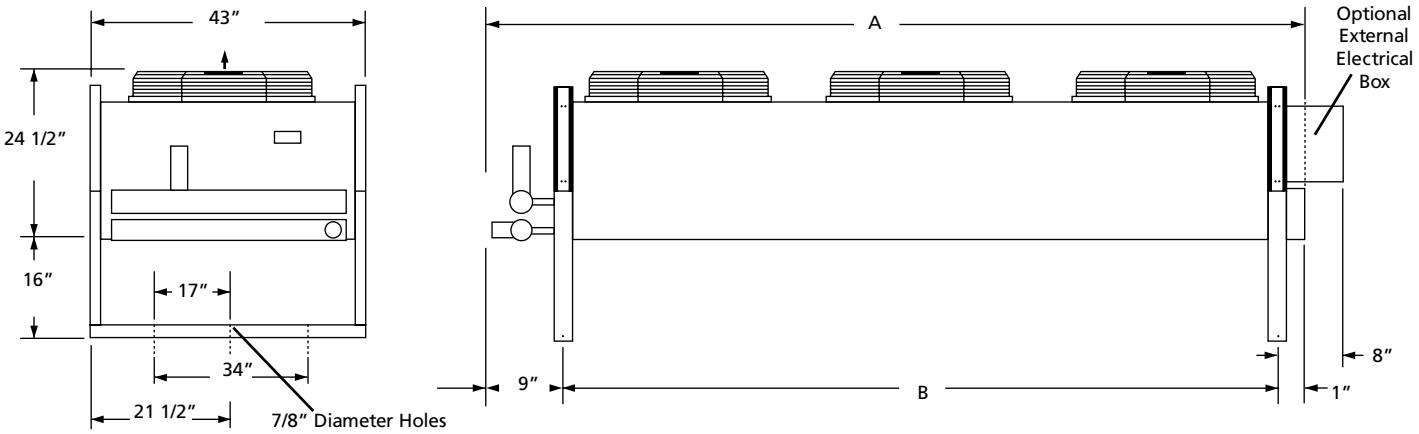

Diagram 8. **Dimensions for Models 024-133, 5-26 with Horizontal Air Flow**

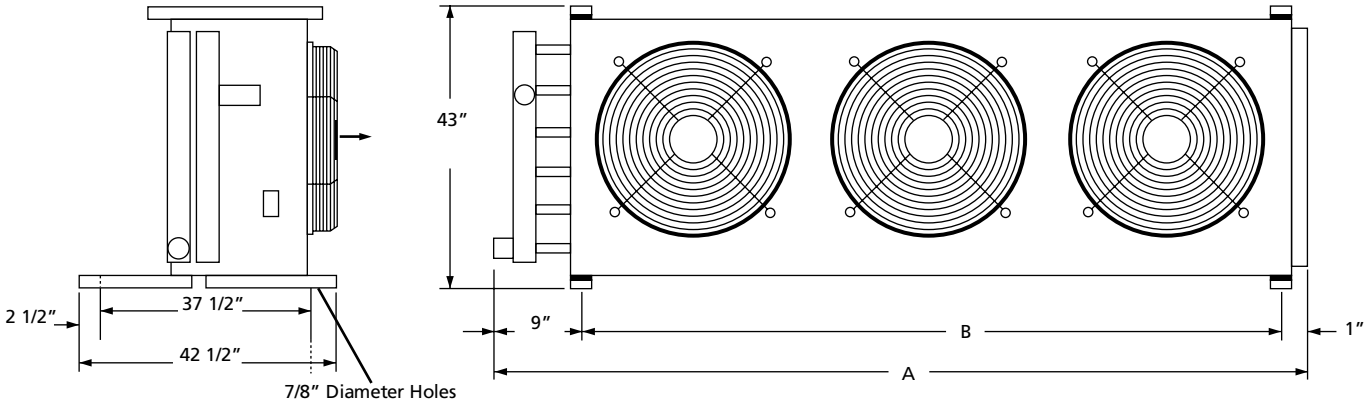

Electrical junction box is located on header end of units unless optional FAN CYCLING is ordered on 230 and 460 volt. In which case, three phase units electrical box is located on unit end opposite header end.

Replacement Parts by InterLINK Commercial Refrigeration Parts

When writing to the factory for service or replacement parts, refer to the model number and serial number of the unit as stamped on the serial plate attached to the unit. If replacement parts are required, mention the date of installation of unit and date of failure, along with an explanation of the malfunctions and a description of the replacement parts required.

Table 10. Replacement Parts List

Model			Motors			Fan Blades	Fan Guards
WSS	DVT	FCB	Quantity	230/1/60	230/460/3/60		
008	001	1	1	2537974	—	2291820	2318491
009	—	1.5	1	2537974	—	2291820	2318491
010	002	2	1	2537974	—	2291820	2318491
016	003	3	1	2537974	—	2291836	2318491
024	005	5	1	2530355	2531193	2292422	23111026
040	008	8	1	2531191	2531193	2292625	23111026
049	010	10	2	2530355	2531193	2292422	23111026
061	012	12	2	2530355	2531193	2292625	23111026
070	014	14	2	2531191	2531193	2292625	23111026
080	016	16	2	2531191	2531193	2292625	23111026
105	021	21	3	2531191	2531193	2292625	23111026
113	023	23	3	2531191	2531193	2292625	23111026
133	026	26	3	2531191	2531193	2292625	23111026

Installation Checklist

Condenser

Start Up Date _____

Model Number _____

Serial Number _____

Electrical

Voltage _____

Amperage _____

Installer:
Name & Address _____

_____

_____

Please retain this information with the condenser.

Since product improvement is a continuing effort, we reserve the right to make changes in specifications without notice.

The name behind the brands you trust.

H-IM-RACC-0807 | version 000

Heatcraft Refrigeration Products LLC • 2175 West Park Place Blvd., Stone Mountain, GA 30087
P: 770.465.5600 • F: 770.465.5990 • www.heatcraftrpd.com